GUILD ◆ EDITION

Woodsmith®

Woodsmith.com

Vol. 42 / No. 252

CRAFTSMAN NIGHT STAND

Also Inside:

Top-Notch Finishing
Spray Gun Essentials

Skill Builder
Faster Frame & Panels

Project Plans:
- Sea Chest
- Deep Reach Clamps
- Prairie-Style Tall Clock
- 4 Handy Kitchen Tools

Woodpeckers®

Precision Woodworking Squares

- Guaranteed accurate to ±.0085° for life.
- One-piece blade machined to exacting tolerances.
- Wall-mountable storage case.
- Available in inch or metric.

UNMATCHED ACCURACY
LIFETIME Woodpeckers GUARANTEE
EST. 1988

12" 1281 Square....**$119.99**
12" 1282SS Stainless Steel Square.....**$159.99**

Precision T-Squares

- Precisely spaced 1mm holes machined every 1/16".
- Laser engraved scale accurate to ±.004".
- Outer edges machined to a 30° bevel for easy reading.
- Wall-mountable storage case.

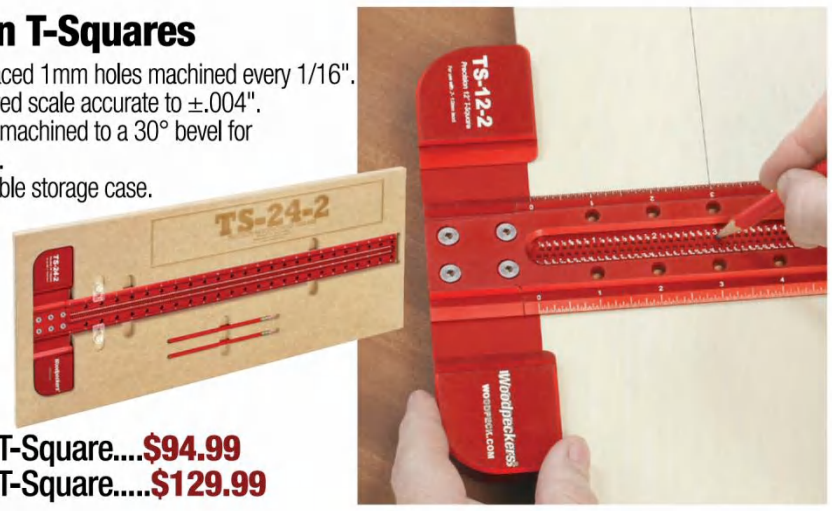

12" TS-12 T-Square....**$94.99**
24" TS-24 T-Square.....**$129.99**

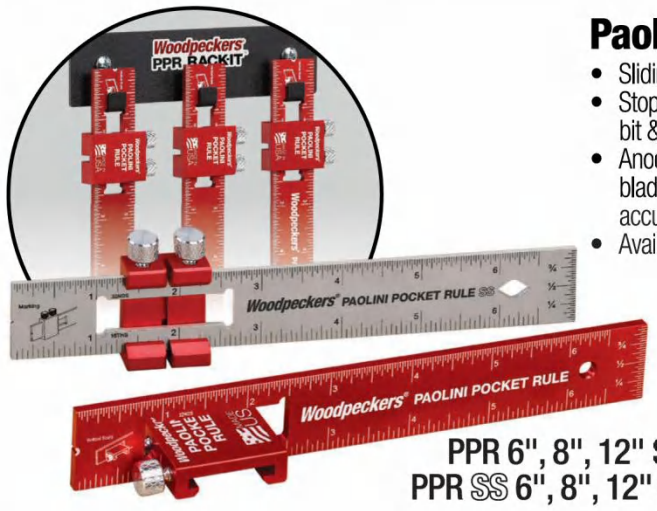

Paolini Pocket Rules

- Sliding stop simplifies repetitive marking.
- Stop doubles as stand to set router bit & saw blade height.
- Anodized aluminum or stainless steel blade with laser engraved scale accurate to ±.004".
- Available in inch, metric or combination.

PPR 6", 8", 12" Set & Rack-It.....**$124.99**
PPR SS 6", 8", 12" Set & Rack-It....**$149.99**

Saddle T-Squares

- Scribing holes on 1/32" spacing.
- One-piece construction with 3/4" deep wrap-around marking.
- Saddle-T Rack-It holds all 4 sizes of Saddle T-Squares.
- Available in inch or metric.

Saddle T-Square Set & Rack-It.....**$299.99**

Clamping Squares PLUS & CSP Clamps

- Positions stock at right angles for joinery & fastening.
- Precision milled for both inside & outside alignment.
- Works with any clamp.
- CSP Clamps add speed & convenience.

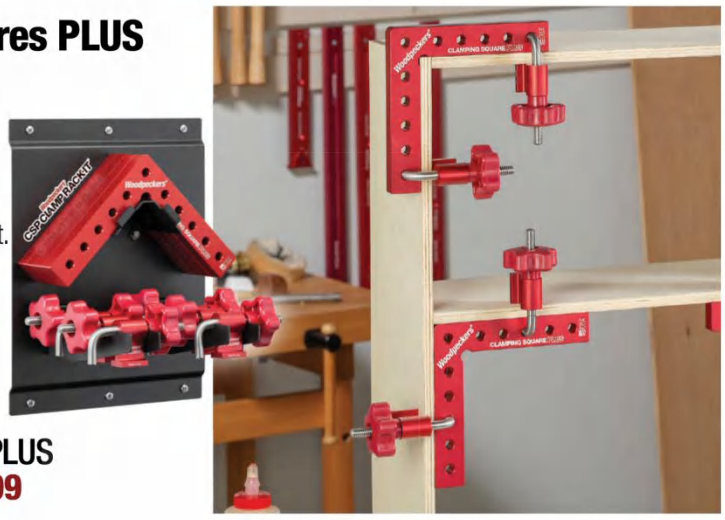

Clamping Squares PLUS Rack-It Kit....**$239.99**

Clamp Rack-It™

- Holds up to 6 heavy-duty parallel jaw clamps.
- Installs on any stud or solid wall surface.
- Simple installation with (2) lag bolts *(included)*.

Clamp Rack-It 4-Pack....**$119.96**

Clamps not included.

ULTRA·SHEAR™ by Woodpeckers®

Parting Tool-Ci

- Creates crisp, clean, narrow parting cuts.
- Sharpest, longest lasting carbide inserts on the market.
- 3/32" cutting width saves stock & minimizes resistance.
- Two insert profiles:
  - Fluted cutter installed
  - Square cutter optional

Parting Tool-Ci....**$79.99**

Woodturning Tools

- Eliminate the drudgery of sharpening with nano-grain carbide inserts mounted to hardened alloy steel shafts.
- Sharpest, longest lasting carbide inserts on the market.
- Exclusive shaft design delivers both fast shaping & fine finishing.
- Square, round & detail tools available individually or as a set.

Mid-Size Woodturning Tool Set **$269.99**

Woodpeck.com

MADE IN USA

Offset Base System

Made for Festool Domino

- Attaches to both Festool Domino DF-500 & DF-700 XL.
- Wider, deeper referencing surface improves stability.
- Precision-milled spacers center mortise on standard dimensions.
- Outrigger carries stops for accurate repeat spacing.

Offset Base System with Systainer Case....$429.99

Domino not included.

Parallel Guide System

Made for Festool Track Saws

- Makes repetitive, parallel cuts with table saw accuracy.
- Maximum rip capacity of 52".
- Narrow stock guides deliver accurate results down to 1/4".

Parallel Guide System with Systainer Case....$429.99

Saw not included.

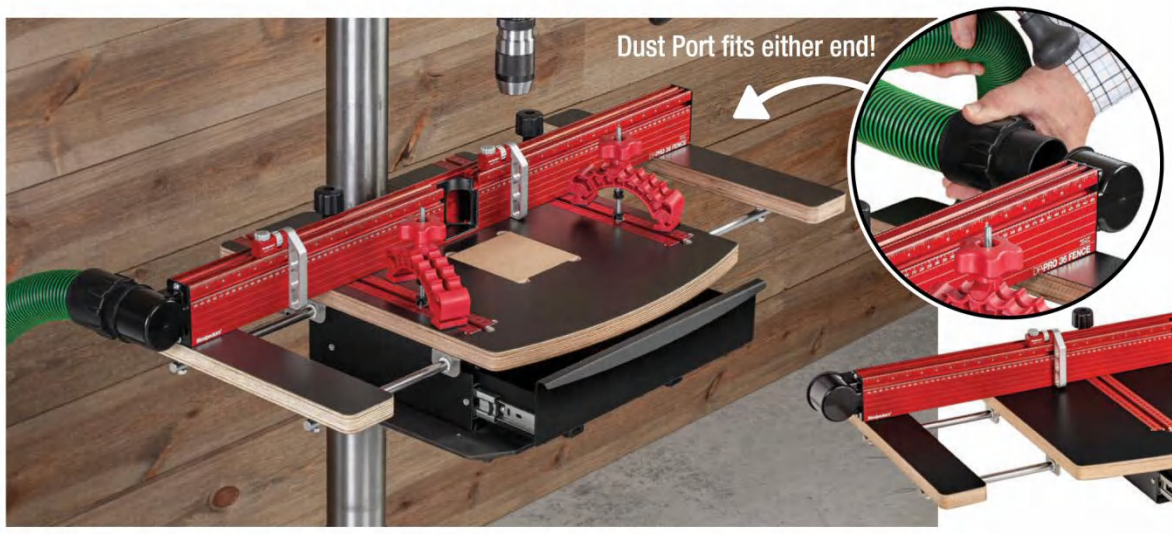

DP•PRO Drill Press Table System

NEW TOOL

- DP-PRO Fence integrates dust collection & delivers accuracy.
- Micro-adjustable DP-PRO Flip Stops.
- DP-PRO Drawer Base simplifies installation on any drill press.
- DP-PRO Tables are full 1" thick with laminate top & bottom.
- Extension Wings for long material support.
- Drawer Base and Fence compatible with all drill press tables.

DP•PRO Master System 48/48.....$439.99
DP•PRO Master System 48/36.....$419.99
DP•PRO Master System 36/36.....$389.99
DP•PRO Master System 36/24.....$369.99

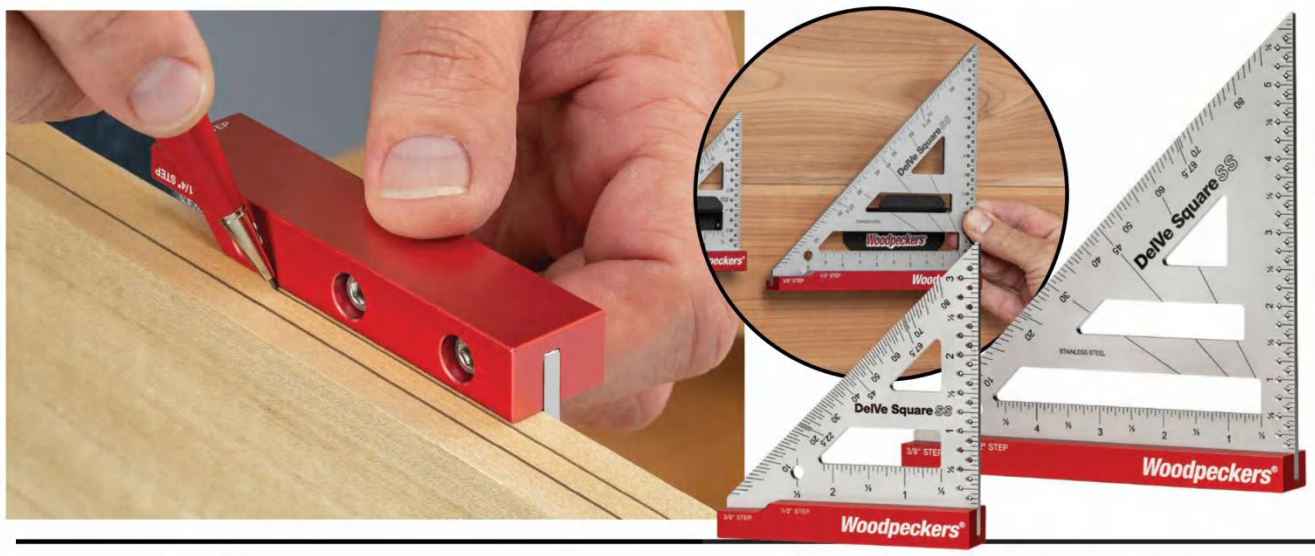

DelVe Square SS & Rack-Its™

NEW TOOL

- Offset base simplifies layout on standard 3/4" material.
- Perfect thirds for mortise and tenon layout.
- Perfect centers for dowel pins and loose tenons.
- Scribing Guides on eighth-inch centers.
- Machined steps in base create accurate set-up blocks.
- Angles in 1° increments plus 22-1/2°and 67-1/2°.
- Rack-It keeps your DelVe protected and easily accessible.

DelVe Square SS Inch Set with Rack-Its $189.99
DelVe Square SS 6" with Rack-It.....$119.99
DelVe Square SS 3-1/2" with Rack-It....$89.99

ULTRA•SHEAR™

by Woodpeckers®

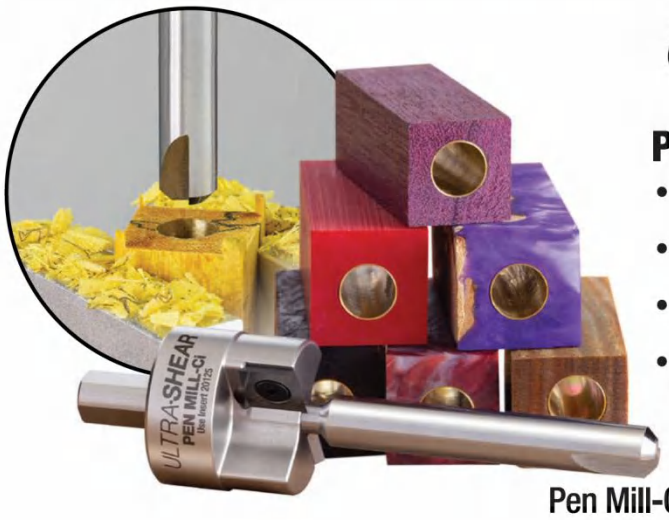

Pen Mill-Ci

- Trims pen blanks square & flush with insert.
- Razor-sharp carbide inserts hold up to exotic materials.
- 12 Pilot Reamers cover almost every pen kit made.
- Cleanest cutting, longest lasting pen mill on the market.

Pen Mill-Ci 13-Pc Set....$169.99

Pen Mandrel System

- Collets on both ends perfectly center & lock the mandrel shaft.
- Tailstock can adjust to exactly the length of your pen project.
- Fits all #2 morse taper head & tail stocks.
- Drive & live centers precision turned from stainless steel.
- Works with almost all pen bushings.
- Matching Precision Pen Bushings available for most popular pens.

Pen Mandrel System $139.99

For more sizes & ordering options for these tools plus hundreds more, visit ***Woodpeck.com***

Woodsmith®

EXECUTIVE EDITOR Phil Huber
ASSISTANT EDITORS Erich Lage, Logan Wittmer
CONTRIBUTING WRITERS Bryan Nelson

EXECUTIVE ART DIRECTOR Todd Lambirth
SENIOR ILLUSTRATOR Dirk Ver Steeg
SENIOR GRAPHIC DESIGNERS Bob Zimmerman, Becky Kralicek
CONTRIBUTING ILLUSTRATOR Erich Lage

CREATIVE DIRECTOR Chris Fitch
PROJECT DESIGNER Dillon Baker
PROJECT DESIGNER/BUILDER John Doyle
CAD SPECIALIST/BUILDER Steve Johnson
SHOP CRAFTSMAN Marc Hopkins
CONTRIBUTING PHOTOGRAPHERS Chris Hennessey, Jack Coyier
SENIOR ELECTRONIC IMAGE SPECIALIST Allan Ruhnke

VP & GM, HOME GROUP Brian VanHeuverswyn

ADVERTISING DIRECTOR Jack Christiansen
847-724-5633
jchristiansen@aimmedia.com
AD PRODUCTION COORDINATOR Kim Hoff
GRAPHIC DESIGNER Julie Green

PRESIDENT, HOME GROUP Peter H. Miller

HOME GROUP
ACTIVE INTEREST MEDIA

Woodsmith® (ISSN 0164-4114) is published bimonthly by Active Interest Media Holdco, Inc., 2143 Grand Ave, Des Moines, IA 50312.

Woodsmith® is a registered trademark of Active Interest Media Holdco, Inc.
Copyright© 2020 Active Interest Media Holdco, Inc. All rights reserved.

Subscriptions: Single copy: $6.95.
Canadian Subscriptions: Canada Post Agreement No. 40038201. Send change of address information to PO Box 881, Station Main, Markham, ON L3P 8M6. Canada BN 82564 2911
Periodicals Postage Paid at Des Moines, IA, and at additional offices.
Postmaster: Send change of address to *Woodsmith*, Box 37274, Boone, IA 50037-0274.

Printed in U.S.A.

WoodsmithCustomerService.com

ONLINE SUBSCRIBER SERVICES

- **VIEW** your account information
- **PAY** your bill
- **RENEW** your subscription
- **CHANGE** your mailing or e-mail address

CUSTOMER SERVICE Phone: **800-333-5075** weekdays

SUBSCRIPTIONS
Customer Service
P.O. Box 842
Des Moines, IA 50304-9961
subscriptions@aimmedia.com

EDITORIAL
Woodsmith Magazine
2143 Grand Avenue
Des Moines, IA 50312
woodsmith@woodsmith.com

ACTIVE INTEREST MEDIA

PRESIDENT & CEO **Andrew W. Clurman**
SENIOR VICE PRESIDENT, TREASURER & CFO **Brian Sellstrom**
SENIOR VICE PRESIDENT, OPERATIONS **Pat Fox**
VICE PRESIDENT, PRODUCTION & MANUFACTURING **Barb Van Sickle**
VICE PRESIDENT, PEOPLE & PLACES **JoAnn Thomas**
AIM BOARD CHAIR **Efrem Zimbalist III**

from the editor

Sawdust

My woodworking follows seasonal rhythms. The fall and early winter see me hard at work on gift projects. At the new year, my attention shifts to shop upgrades that I discovered I needed during the holiday rush. From there, I start in on projects for my own home or ones that I just need to make, whether I have a place for them or not. As you can see on the next page, the projects in this issue address each stage. How about you? What patterns or interests have you discovered in your own workshop?

CHRIS FITCH, CREATIVE DIRECTOR

◄ My woodworking began with my father's *Shopsmith Mark V*. Being a creative, left–brain sort, that machine was a gateway to many happy hours. Of the hundreds of projects I have designed and built, the machines are the most fun. I mean, how can you not have fun making a CNC router or a big belt sander?

At home, I stay busy with wood carving, metalwork, gardening, never ending maintenance on an old farm all the while keeping company with my dear wife and what feels like our own animal rescue network.

STATEMENT OF OWNERSHIP, MANAGEMENT, AND CIRCULATION
(Required by 39 U.S.C. 3685)

1. Publication Title: *Woodsmith*. 2. Publication No.: 0164-4114 3. Filing Date: September 1, 2020. 4. Issue Frequency: Bimonthly. 5. No. of issues published annually: 6 (six). 6. Annual subscription price: $29.00. 7. Complete mailing address of known office of publication: 2143 Grand Avenue, Des Moines, (Polk County), Iowa 50312-5306. 8. Complete mailing address of the headquarters or general business offices of the publisher: 2143 Grand Avenue, Des Moines, (Polk County), Iowa 50312-5306. 9. Full names and complete mailing addresses of publisher, editor, and managing editor: Publisher: Active Interest Media Holdco, Inc, 2143 Grand Avenue, Des Moines, Iowa 50312; Editor: Phil Huber, 2143 Grand Avenue, Des Moines, Iowa 50312; Managing Editor: Phil Huber, 2143 Grand Avenue, Des Moines, Iowa 50312. 10. Owner: Active Interest Media Holdco, Inc, 5720 Flatiron Parkway, Boulder, CO 80301. 11. Known bondholders, mortgagees, and other security holders owning 1 percent or more of total amount of bonds, mortgages or other securities: None. 12. (Does not apply.) 13. Publication Title: *Woodsmith*. 14. Issue Date for Circulation Data Below: August/September 2020 15. Extent and nature of circulation:

	Average no. copies each issue during preceding 12 months	Average no. copies of single issue published nearest to filing date
A. Total number of copies (net press run)	159,210	150,735
B. Paid circulation (by mail and outside the mail):		
1. Paid/requested outside-county mail subscriptions stated on PS Form 3541	125,506	122,839
2. Mailed in-county paid subscriptions stated on PS Form 3541	0	0
3. Paid distrib. outside the mails (sales through dealers/carriers, street vendors, counter sales, and other paid distrib. outside USPS)	5,916	4,400
4. Paid distribution by other classes of mail through the USPS	0	0
C. Total paid distribution	131,422	127,239
D. Free or nominal rate distribution (by mail and outside the mail)		
1. Free or nominal rate outside-county copies included on PS form 3541	2,530	2,818
2. Free or nominal rate in-county copies included on PS Form 3541	0	0
3. Free or nominal rate copies mailed at other classes through the USPS	0	0
4. Free or nominal rate distribution outside the mail (carriers or other means)	0	0
E. Total free or nominal rate distribution	2,530	2,818
F. Total distribution	133,952	130,057
G. Copies not distributed	25,258	20,678
H. Total	159,210	150,735
I. Percentage paid and/or requested circulation	98.11%	98.44%
16. Electronic Copy Circulation; Woodsmith		
A. Paid Electronic Copies	608	561
B. Total paid print copies + paid electronic copies	134,179	130,317
C. Total print distribution + paid electronic copies	135,965	132,376
D. Percentage paid (both print and electronic copies)	98.69%	97.83%

I certify that 50% of all my distribution copies (electronic and print) are paid above a nominal price.
17. Publication of Statement of Ownership. Will be printed in the Dec./Jan. 2021 (#252) issue of this publication.
18. I certify that all information furnished on this form is true and complete. (signed) Phil Huber, Editor

On occasion, we allow companies whose products and services may be of interest to you to send advertising mail to our subscribers. We are careful to choose ethical companies that have information of genuine interest to our subscribers. Most of our subscribers appreciate these materials. However, if you prefer to have your name deleted from the mailing list made available to other companies, please write to us at Woodsmith, 2143 Grand Avenue, Des Moines, IA 50312

contents

No. 252 • December/January 2021

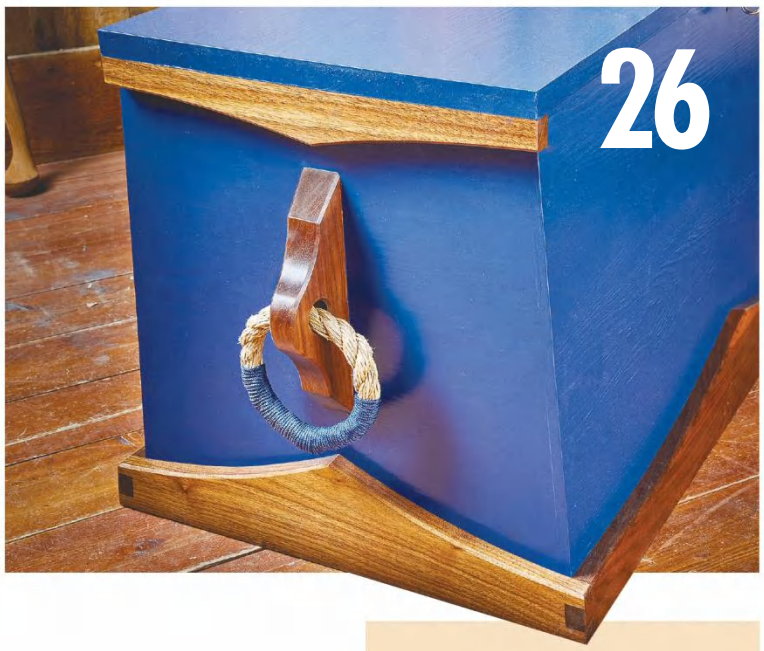

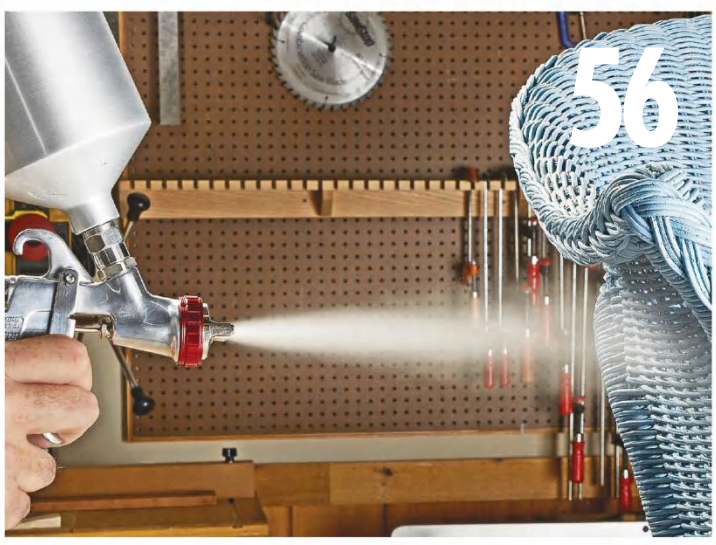

Projects

weekend project
Kitchen Tools 20
Make these four tools for you or to give as gifts, they're the perfect way to use up leftover pieces of wood.

designer project
Sea Chest 26
You don't need to be headed out to sea to enjoy the storage provided by this handsome chest.

heirloom project
Prairie-Style Tall Clock 34
This clock ticks all the boxes: mechanical movement, custom face and bob, and unique gridwork in the door.

heirloom project
Craftsman Night Stand 42
Taking cues from an earlier dresser, this project puts storage and quartersawn white oak front and center.

shop project
Deep-Reach Clamps 50
These hefty clamps solve problems and save you money and easily tackle big clamping challenges.

Departments

from our readers
Tips & Techniques 6

router workshop
Infinity Router Table 10

woodworking technique
Using Kumiko in Furniture 14

woodworking technique
Frame & Panel Construction 16

finishing room
Finishing With A Spray Gun 56

all about
Screw Threads in Wood 60

mastering the table saw
ZeroPlay 360 Hardware Kit 62

Q & A: Glazes 65

Sources 66

READER'S Tips

Shop-Made Knob

I think we're all familiar with the struggle. You're working on a project, need a knob for a jig, and lo and behold you don't have one the correct size. To avoid this frustrating problem all together, I have just started to make my own knobs, like you see here.

A SERIES OF HOLES. The knobs are easy to make. I make mine out of plywood and start by laying out a series of holes. Then, after spending a few minutes at the drill press drilling the holes, I can cut the knob out and am left with the perfect knob. The best part of all is that they can be made for any size thread, simply by installing a different T-nut.

One of the great uses I found for these was to combine them with a piece of stock cut into a curve. They make the perfect hold-down.

Sally Neimeier
Cedar Rapids, Iowa

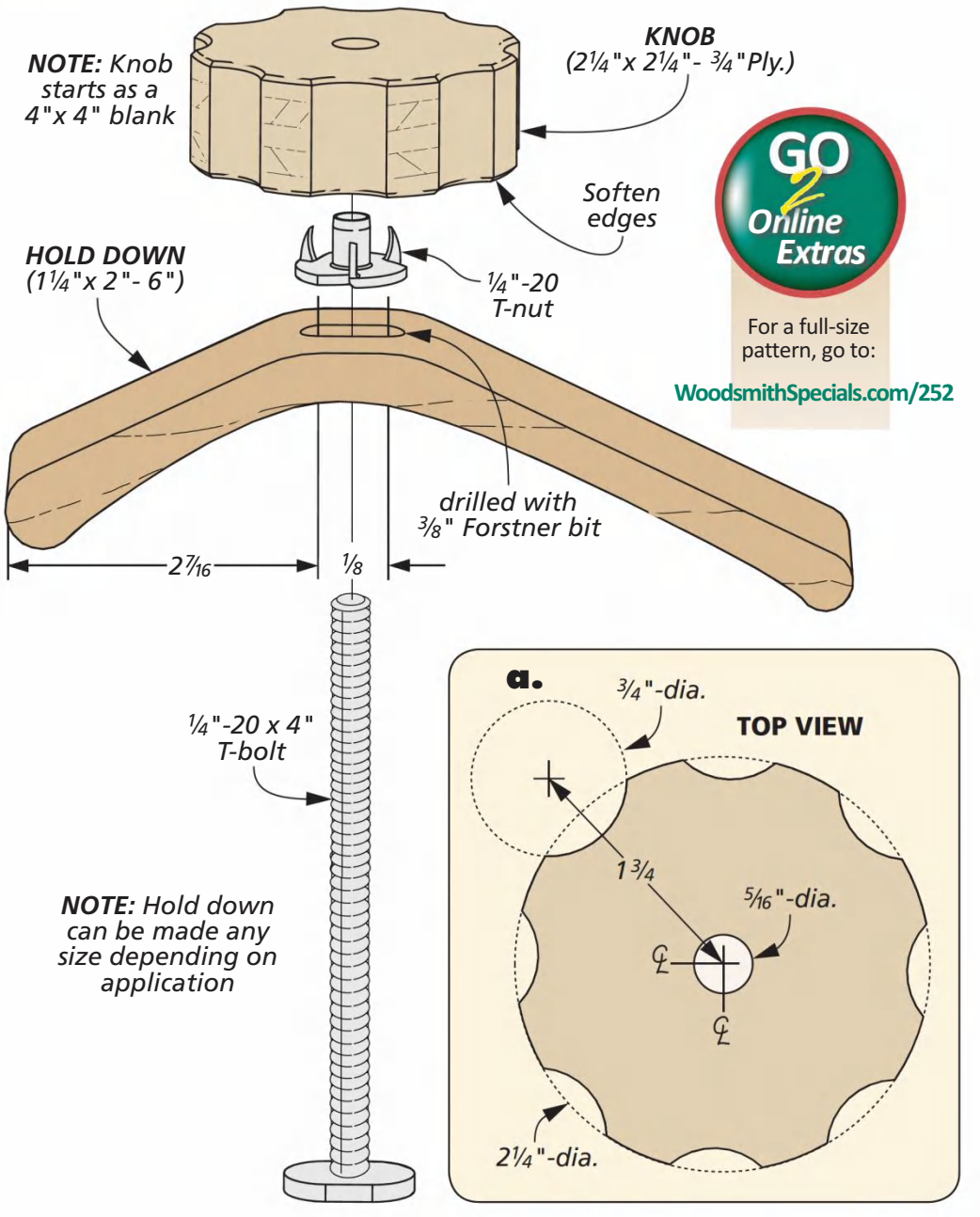

GO 2 Online Extras

For a full-size pattern, go to:

WoodsmithSpecials.com/252

SUBMIT A TIP TO WIN

GO ONLINE

If you have an original shop tip, we would like to hear from you and consider publishing your tip in one or more of our publications. So jump online and go to:

SubmitWoodsmithTips.com

You'll be able to tell us all about your tip and upload your photos and drawings. You can also mail your tips to "Woodsmith Tips" at the editorial address shown on page 2. We will pay up to $200 if we publish your tip.

QUICK TIPS

Workbench Mat. *Jim VanWiltz* of *Harlan, IA* found that a carpeted floor runner was the perfect workbench mat. The mat provides a cushion to prevent dinging parts and also keeps them in place while he is working with them. Best of all, the floor runners are inexpensive at most big-box stores.

Manual Keeper. *Richard Leif* of *Port Hillard, MA* got tired of shoving his power tool manuals inside of a shop cabinet. Instead, Richard decided to store them at the machine using a clear expanding portfolio. The portfolio attaches to the side of the machine with double-sided tape and closes to keep the dust out.

Illustrations: Becky Kralicek

Sandpaper Quick Reload

Aligning the holes of my random orbit sander to the holes in the sandpaper has always taken more time than it should. My solution was to use the tin from dollar store cookies, combined with a simple alignment jig.

As you can see in the photos, the alignment jig is just a series of dowels that fit into holes drilled into a bottom plate. The sanding discs fit over it, loop side up. Then, when it's time for a new disc, I can open the tin, and slip my sander over the dowels. Suddenly it's a lot faster, easier, and tastier to reload my sander.

Charley Christenson
Grand Rapids, Michigan

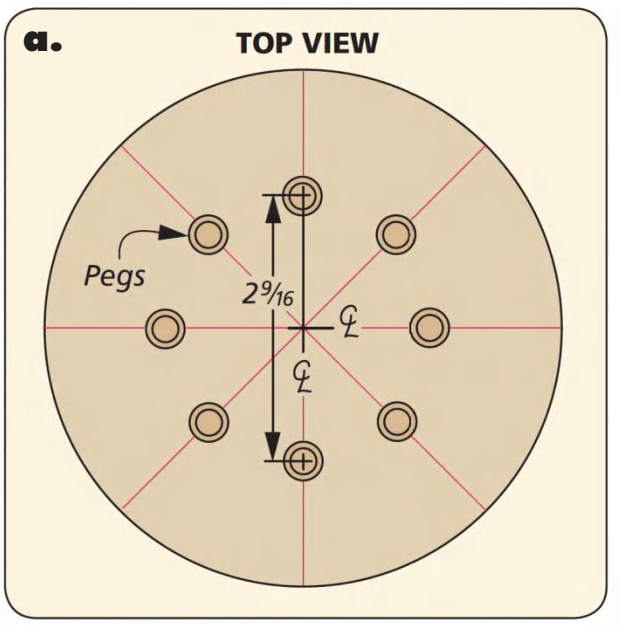

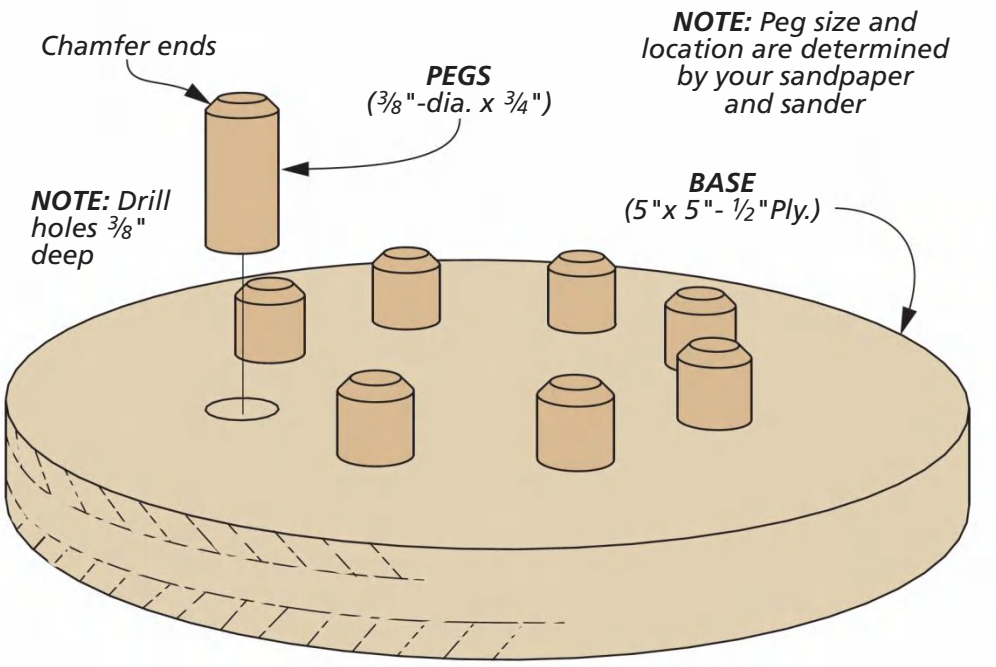

DIGITAL WOODSMITH

RECEIVE FREE ETIPS BY EMAIL

Now you can have the best time-saving secrets, solutions, and techniques sent directly to your email inbox. Simply go to:

Woodsmith.com
and click on,

Woodsmith eTips

You'll receive one of our favorite tips by email each and every week.

QUICK TIP

Handscrew Sander Stand. *Jared Huber* of *Appleton, WI* found it frustrating to try and sand small parts with his random orbit sander. The parts tended to be hard to hold onto and are too easy to round over. To give himself a little more control, Jared found that he could use a handscrew clamped to the bench to hold his sander. Not only does this give him better visibility while he's sanding small parts, its also much easier to hold the part flat as he sands. Now sanding small parts just became a whole lot easier.

Sanding Holes

I've always found it challenging to sand the inside of small holes. To make things easier, I cut a kerf in a slightly smaller dowel at the band saw. Then, after placing folded sandpaper in the kerf, I chucked the dowel in my drill and made quick work of the task.

Chris Hennessey
Princeton, Missouri

Rockler Innovations

Bandy Clamps
Starting at **$9.99** (57823)

Bench Cookie® Work Grippers
$11.99 (46902)

Silicone Glue Brushes
$3.99 (45624)

Discover hundreds more online, in our catalog or at a store near you.
Get Free Shipping over $39 by visiting rockler.com/email (Code 1044)

For a store near you or free catalog: **Rockler.com**

ROCKLER® CREATE WITH CONFIDENCE

Infinity Portable Router Table

▲ The *Infinity* table arrives as a set of parts. A few screws take care of the cabinet assembly, then you set the fence in place and attach the dust hose.

Small shops require compact solutions when it comes to working efficiently and accurately. If you have a compact router, that solution is adding the *Infinity Tools Portable Router Table System*. Here's what you need to know about the table and accessories.

SOME ASSEMBLY REQUIRED. As you should expect with any "power tool," you'll need to do a little assembly before you're up and running. But you won't find that it takes all that long.

The router table cabinet comes disassembled to keep everything nice and compact (photo at left). On the other hand, the router table fence is basically fully assembled. Just add the dust port (shown attached).

Assembly is pretty straightforward, but if you need instructions, you'll have to download them from Infinity's website. I didn't find any in the kit that arrived.

The parts for the table come predrilled to an extent. By that, I mean you'll clamp the basic frame together and use the predrilled holes in the sides as a guide to drill pilot holes into the back and bottom, which is a must to avoid splitting the plywood as you drive the screws.

I'd suggest adding the cord wrap at this point since you'll have easier access to the inside of the table without the top in place. Once I had everything assembled and began using the table I noticed the clearance

Written by: Bryan Nelson

between the overhang of the top and the cord wrap was a bit tight, making it a knuckle banger anytime you needed to store the cord. Instead of orienting the cord wrap vertically, I reinstalled it horizontally and found that to be much better (photo at right).

CLOSE UP THE CABINET. The next order of business is to add the top. The assembled table fits into routed grooves on the bottom face of the top to position it correctly. Then to enclose the front, the plexiglass door slips into grooves cut into the top and bottom. The Microdot surfacing allowed workpieces to slide smoothly across the top and against the fence.

INSTALLING THE ROUTER. The insert plate that comes with the table features predrilled holes for mounting a wide range of routers (photo at far right). *Infinity's* website currently lists 13 routers the insert is configured for. Just be prepared to spend a few minutes figuring out which holes go with your router.

Once the router is attached, you're just about ready to slip it into the opening in the top. First, you'll need to add the leveling screws and then use a straightedge to adjust them until the insert is level with the top. Simple mounting hardware locks the insert (and router) to the table, but makes it easy to remove for hand-held work.

With the router in place, there is room to store wrenches and bits on the inside of the cabinet. Although I found they would end up coated with fine dust with extended use.

FENCE & DUST COLLECTION. The basic fence comes preassembled. The only thing you'll need to do is attach the dust port and then slip the mounting bolts into the T-track installed in the router table top and tighten the knobs.

The dust collection system hose attaches to the fence port and then 1½" down to a T-fitting that slips into the back of the cabinet. This way, you not only pull dust and chips from the fence when needed, but also capture anything that falls into the cabinet, as well.

OPTIONAL ACCESSORY. Since this is a compact, portable router table, it's a good idea to clamp it in place during use. For that you can use the optional clamps shown at left. These are the type of clamps you'd use to attach an auxiliary fence to your table saw and *Infinity* has them available in two different sizes depending on the thickness of your benchtop.

I did have to drill out the holes a bit to allow the clamps to easily slip into the place. And the large size clamps opened just wide enough to allow me to clamp the table to my benchtop.

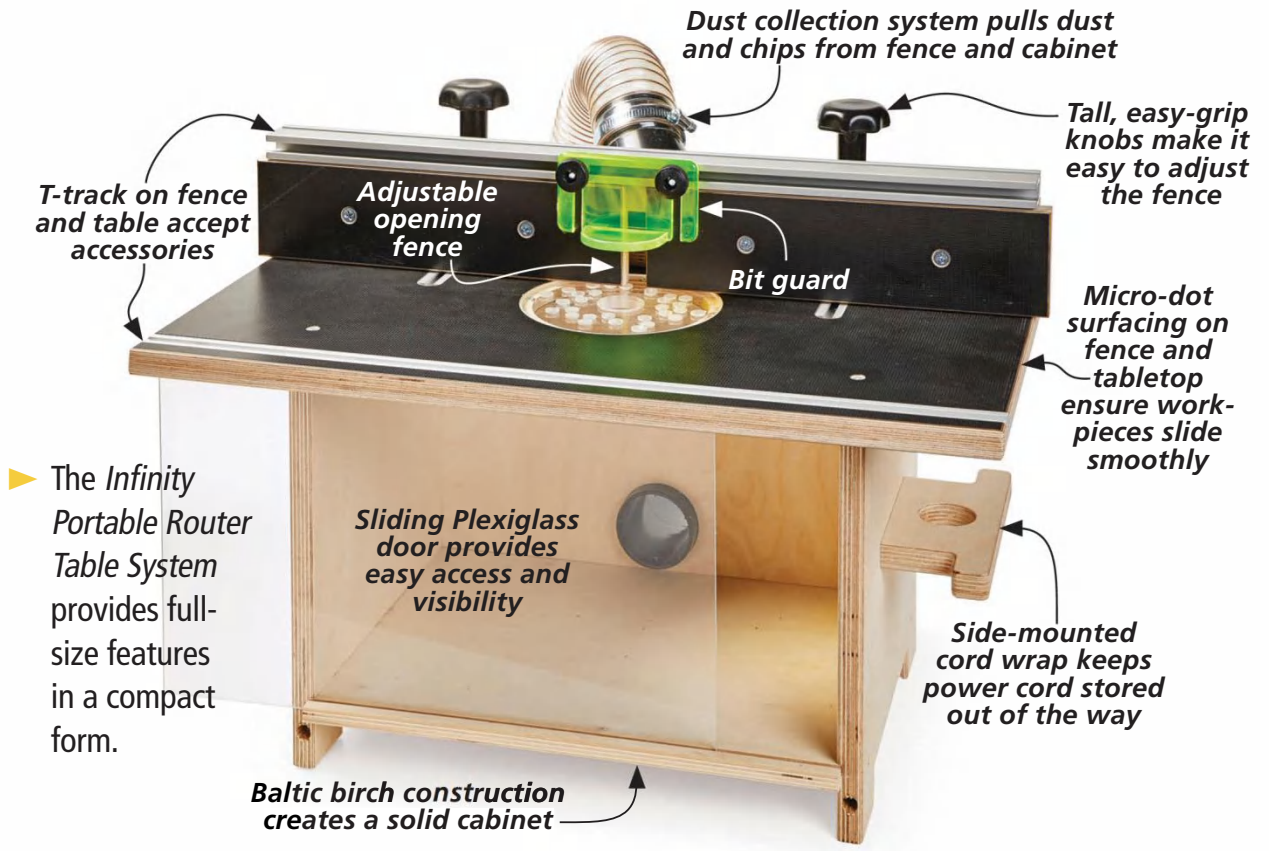

The *Infinity Portable Router Table System* provides full-size features in a compact form.

Mounting your compact router is made easy with the pre-drilled insert plate provided with the table. Simply position your router to align with the right set of holes and screw it in place.

Optional fence clamps fit into pre-drilled holes in the sides of the router table. Two different clamp sizes accommodate tops from 1½" to 3" thick, or 3" to 4½" to keep the router securely in place.

USING THE INFINITY TABLE

With everything assembled, it was time to put the table to use. The *Infinity* router table works and feels like a full-size version. Unless you're dealing with really large workpieces, the size of the top worked perfectly for my needs.

BIT CHANGES. One thing you may find challenging is bit changes. With the *Bosch Colt* router I used, I wasn't able to drop the body out of the router base to change the bit since there wasn't enough "height." The router body hit the bottom of the cabinet before I could slip it out of the base. I expect that'll be an issue with many compact routers.

FULL-SERVICE FENCE. The fence is a different story. I had no issues at all with its use. It moves smoothly and locks solidly in place. I really like the tall locking knobs as they provide access for a good grip.

A pair of knobs along the back side of each fence face allows you to adjust the opening between the faces to match the bit you're using, as in the photo above. And when you need them, featherboards slip into a T-track in the fence (and along the front edge of the table) to ensure an accurate cut (upper right photo and main photo on page 10).

With the split fence design it's a simple matter to "bury" a bit. This allows you to use bits with bearings like you see above. Non-bearing bits can also be recessed so you can use just the part you need.

DUST COLLECTION. Dust is every woodworker's nemesis. But the *Infinity* table handles that well. Besides collecting dust via a port right at the fence, the included T-fitting and hose assist in pulling dust from the cabinet, as well (lower left photo). Overall, I found the system collected the bulk of the dust and chips generated.

FINAL ACCESSORY. One other accessory available for the *Infinity* router table is their standard flip stop, like you see in the photo below. It slips into the track on the top of the fence when you need to start or stop a cut accurately. Due to the length of the fence, the flip stop will only come in handy for operations that don't require long distances or positioning.

Overall the *Infinity* compact router table is a great addition to a small shop tight on space. But even larger shops will find it handy as a second router table that you can have on hand for production style setups. W

Dust collection is top-notch with dust and chips being collected from both the fence and cabinet using a T-shaped dust fitting in the back.

The optional flip stop from *Infinity* works perfectly with the track in the top of the fence, as shown above. The stop ensures repeatable cuts for a wide range of operations.

The Best is Now Even Better...

Woodpeckers®

Slab Flattening Mill PRO

Wider, Thinner, Thicker & Cleaner...

Woodpeckers Slab Flattening Mill PRO has all the best features of our original Slab Flattening Mill, but with a new router carriage that has an amazing range of adjustment, working with stock as thin as 3/4" and up over 3" without spacers or shims. Dust collection is now built right into the carriage with twin collection ports that collect equally well on push or pull cuts. We reinforced the frame of the router carriage for even better surface flatness and finish.

Like the original, the Slab Flattening Mill PRO and your router can surface irregularly shaped and twisted slabs into stunning table, counter and shelf surfaces. With a standard width capacity of 48-1/2" and optional extensions available, there's no slab project you can't master.

Learn more about Woodpeckers Slab Flattening Mill PRO at ***woodpeck.com***

Woodpeckers, LLC • Strongsville, Ohio • 800.752.0725 • ***woodpeck.com***

Using Kumiko in Furniture

Kumiko is a delicate and sophisticated technique of assembling wooden pieces without the use of nails to make decorative panels. Thinly slit wooden pieces are grooved, punched, and mortised, and then fitted individually using a plane, saw, chisel, and other tools to make fine adjustments.

Most of the kumiko I make is intended to be hung on the wall as decorative art, but I do sometimes incorporate it into the boxes and furniture I make. When I first began to do this, I would make the box, for example, then make and fit the kumiko to it. But that's the wrong way to do it, because often you are left planing the kumiko frame down to fit the opening you have. That's undesirable for a few reasons. First, it weakens the frame. Second, you end up with the outer frame pieces thinner than the interior ones and the infill pieces. The panel begins to look unbalanced. Finally, it's just plain tedious and difficult to plane the outer frame parts of a kumiko panel. So, I now make the panel first, then build the box around it. This isn't as difficult as it sounds.

MARK, DON'T MEASURE

I actually learned this from making frames for decorative panels,

Written by: Matt Kenney

but I should have known it from years of making furniture. Measuring introduces far more errors than marking does. So, when I am making a box or piece of furniture with kumiko in it, I make the kumiko panel, cut off the horns, then use the panel itself to determine the length of things like box sides, door rails, etc.

Exactly how you do this depends on the joinery involved. For example, to use kumiko in the lid of a mitered box, I miter one end of the side, lay the kumiko down, align it with the top of the miter, then mark the other end.

To determine the length of a door rail, I'd cut a tenon at one end, align the kumiko with the tenon's shoulder then mark the opposite end. Hmm…I think I see a pattern here. Cut the joint at one end, mark the other.

BUILD AROUND THE PANEL

This follows from marking rather than measuring. The best example of this from my own work is box 51 of the 52 boxes I made during the course of 52 weeks. There is kumiko in the plinth of the tea cabinet.

The first time I made box 51, I made the plinth first then made the kumiko to fit. That was frustrating and difficult. Every time I've made box 51 since, I've made the kumiko first then the plinth. Now it goes together without a hitch.

You can do the same for doors by sizing the rail length directly from the kumiko panel, then using the panel to help locate mortises for the rail tenons. Or, just use stub tenons on the lower rail and simply slide it up to the bottom of the panel.

MAKE THE OUTER FRAME THICKER

For large pieces of furniture with large panels, it's a good idea to make the four outer frame pieces thicker than the rest of the pieces in the panel. This makes the panel stronger, but also provides some visual weight, so that you don't jump from the wide parts of a door frame to the thin parts of the kumiko.

Think of the outer frame as a transition, in other words. An alternative is to make the frame pieces all the same thickness, but surround the kumiko frame with a intermediary and thicker "frame" to make the transition.

▲ In this tea box, a kumiko panel lightens the appearance of the plinth.

▲ A kumiko door panel creates a focal point for a wall cabinet that has both a door and drawers.

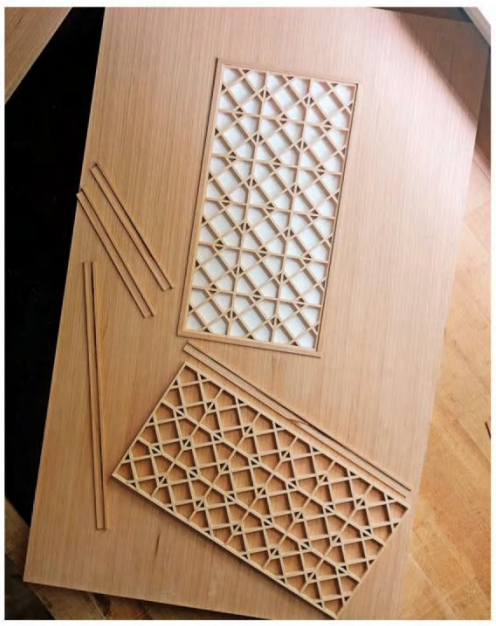

▲ Backing a kumiko panel with paper highlights the graphic elements of the panel.

DON'T GO BIG

Here's a bit of advice that might be more personal preference than solid design principle. I think that as the size of the furniture grows, the size of the kumiko should not. Certainly, you can make larger panels, but keep the size of the infill patterns relatively small. A bunch of small hemp leaf patterns repeated in a large panel looks better than a large panel with just a few patterns, at least to my eye.

Also, don't go too thick with the parts. Even in full-size furniture, kumiko that is ⅛" thick will look great. If you do go thicker, don't take it beyond ¼" Personally, I'd keep it at 3⁄16" thick at the most. Still, I'm sure that someone out there will make a stunning piece with really thick kumiko and really big patterns. W

Matt Kenney grew up making things such as tree forts and skate ramps from wood. Now he's a furniture maker whose passion for the craft drives him to share his knowledge and experience with other woodworkers. This article is adapted from his latest book, The Art of Kumiko (Blue Hills Press). Used by permission.

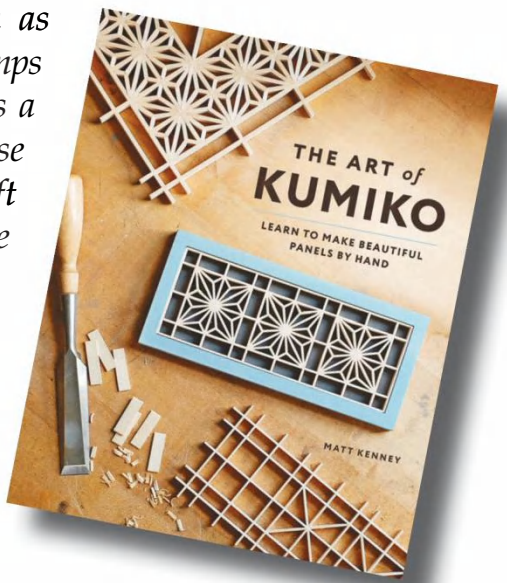

Photos: Matt Kenney

Quick & Easy Construction

▲ A plywood spline (bottom) takes the place of an integrated stub tenon.

Building furniture breaks down into a series of components or mini-projects. Each of these requires their own set of skills and intricacies. In casework, one of those projects within a project is making frame and panel assemblies. These can be used for the main structure of the case as well as to make doors or even assemble large drawer fronts.

There are several approaches you can take to make these. One of our favorites uses stub tenon and groove joints to connect the stiles and rails. When combined with a plywood panel, the result is a strong, rigid construction that is also straightforward to make. (The nightstand shown on page 42 shows a solid-wood version of this method.)

In this article, I want to dig into the details of this construction. Then offer a streamlined method to create it.

JOINERY OVERVIEW. In a stub tenon and groove assembly, a groove is cut on the inside edges of all the frame pieces. This does double duty. Not only does the groove house the panel, it also forms a shallow mortise for anchoring the horizontal rails to the vertical stiles.

The ends of the rails have a short tenon that matches the width and depth of the grooves. You can see this in the upper example in the left margin. This connection seems like the focus of the joint and may come across as a little lacking strength-wise. However, that ignores the help provided by a plywood panel.

Written by: Phil Huber

Gluing the panel in place ups the glue surface area significantly.

The point of all this is to say that it's the thickness of the plywood panel that drives the success of the joinery. The width of the grooves needs to match to the thickness of the plywood in order to create a strong glue joint. Once that's achieved, you size the stub tenon to match the panel thickness.

These two steps: cutting the groove and forming the stub tenon can take some time (and a bunch of test cuts) to dial in.

It turns out, there's a way to eliminate the second step. Replace the tenon with a spline. You can see this in the lower example in the photo on the previous page. All you have to do is cut a few additional grooves. This also simplifies sizing the parts since you don't need to account for the tenon.

Cutting the grooves using a blade narrower than the thickness of the plywood allows you to create a snug fit and center the groove without a lot of complication. A featherboard increases consistency and safety.

CUTTING GROOVES

The first step is forming the grooves in the frame pieces. I'll show this on the table saw. Attach a tall auxiliary fence to the rip fence. (You'll need this for an upcoming step.) You can cut the grooves with a combination blade, however a flat-topped rip blade cuts more efficiently and leaves a cleaner groove. A groove depth of ⅜" or ½" offers good glue surface.

Position the rip fence so that the blade is slightly off center from the thickness of your frame stock. My preference is to have the blade to the left of the center. This way if the workpiece should drift away from the fence during a cut, the piece isn't spoiled because it will be cutting into the area where the groove is formed.

The blade is narrower than the plywood thickness. So to create a groove, you'll make two passes. But you don't adjust the fence. Make a pass, as shown in the photo above. Then flip the workpiece around and make a second cut. You'll see this widens the groove and centers it.

Compare the groove to your plywood (left photo below). You should have to ease the panel into the groove — not loose, but not something you have to force, either. Adjust the rip fence in small increments since each adjustment is doubled.

Then run a groove on the inside edges of all the stiles and rails. Here's where things change up. Grab the rails and hold them on end and cut grooves across the ends, as shown below.

Cut and test is the name of the game during the setup. Use a piece of the plywood you'll use for the panel. You should feel slight resistance as the plywood slips into the groove.

Cutting a groove across the ends of the rails creates a pocket for the spline. A backer board keeps the workpiece from wobbling during the cut.

SIZING THE PANELS

Odd as it may sound, cutting grooves stands as the only real "joinery" step. From here on, it's just a matter of cutting some plywood pieces to size.

This begins with the panel. Rather than rely on plans, I go from the real life frame. The photo at right shows what I mean. Clamp the stiles and rails together in their final configuration. Then measure the distance between the bottoms of the grooves in the stiles. I like to cut the panel a hair narrower so that the stiles and rails meet tightly.

For the length of the panel, I measure the opening and add the combined depths of the grooves (minus a hair), as shown in Photo 1 below. If you were to put the panel in place, you'd notice the open pockets (mortises) that the splines fit into.

MAKING THE SPLINES

The splines begin as a narrow strip cut from some leftover plywood, as shown in Photo 2. The width of the strip measures slightly less than the mating grooves (inset above).

Photo 3 below shows how to determine the length of the splines by using the rail and panel as a gauge.

Cutting short pieces like this is best approached with a backsaw, as you can see in Photo 4. Don't worry if the spline is a little long. You can always trim it flush after assembling the frame.

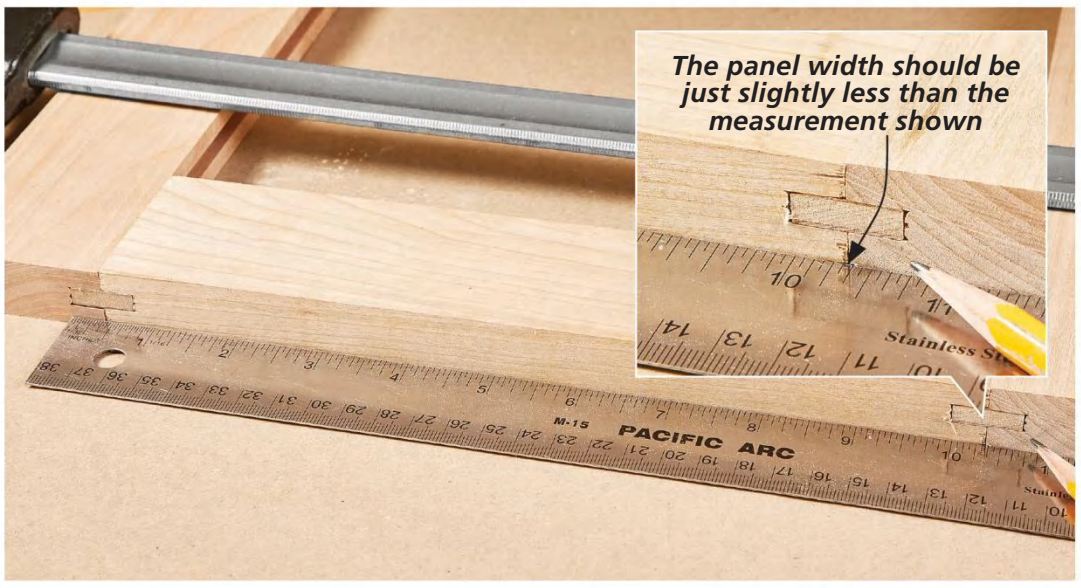

Assembling the frame without glue offers a reality check for sizing both the plywood center panel and the plywood splines. Cutting these a hair short provides space for glue and ensures a gap-free assembly.

Measure the depth of the groove to help determine the size of the plywood panel as well as the splines.

Rip a strip of plywood to create a blank for the splines. Make sure you don't cut the blank too wide.

Slip the panel into a rail and measure the length of the groove on the end. This gives you the length of the spline you need.

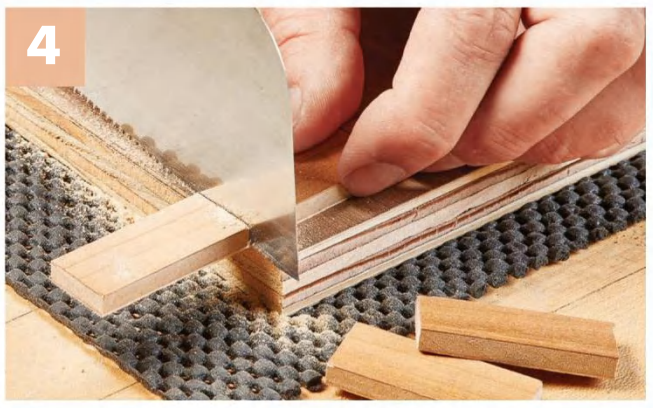

Mark the length of the spline on the blank and cut each one free with a backsaw. This is a safe, easy way to cut small parts.

ASSEMBLING THE DOOR

At this point, it's real easy to grab the glue bottle and head for your clamp rack. But it pays big rewards if you fit all the pieces together without glue. This lets you sniff out any trouble spots before it's too late — and messy.

START WITH A STILE. The photos on the next page show my assembly method. It begins with running a bead of glue into a groove in one of the stiles (Photo 1). Since you have a snug fit, you don't need a lot of glue.

Slip the panel into place and add a spline on either end. The splines help you center the panel.

ADD RAILS. Apply glue to the grooves on the rails and quickly fit them to the splines and panel (Photo 2). Don't forget to add glue to the end grooves.

FINAL STILE. The remaining stile is all that's left, as shown in Photo 3. Press the joints home and lay the assembly flat on the bench.

A clamp across each rail is all that you need, as in Photo 4. Then measure across the middle to make sure the rails aren't bowing out. Then wait.

Substituting splines for stub tenons doesn't change the appearance of the finished product or its strength. But what it does do is allow you to get from a stack of parts to final assembly with a little more confidence. W

Squeeze some glue into the groove of one stile. Then fit a pair of splines and the panel into place. The position of the splines should help you center the panel.

The rails come next. Add glue to the edge grooves as well as the short grooves on the ends. Work quickly so that the glue doesn't run out of the groove and create a mess.

Add the remaining two splines and glue on the last stile. You should be able to close up the joints with hand pressure. Then check that the assembly is flat and square.

A pair of clamps across the stile and rail connection keep these critical joints tight as the glue dries. Center the clamping pressure to avoid bowing the frame and panel.

EST 1928
WOODCRAFT®
Over 75 Stores Nationwide – Stop In And Visit With Us!
QUALITY WOODWORKING TOOLS • SUPPLIES • ADVICE®

For A Free Catalog Or To Find Your Local Woodcraft Store, Visit woodcraft.com Or Call 800-225-1153. Follow Us:
21WS02H

Kitchen Tools

This quartet of small projects is sure to please the cook in your life. You can make one or all four in a weekend.

Making my own woodworking tools offers a new level of enjoyment of practicing this craft. I also love to cook. So why not bring those two concepts together by making some kitchen tools? Here are four options that would make an ideal set or to mix and match.

Cutting boards use up scrap pieces most of us have squirreled away. A small one like this serves as an ideal extra prep surface in the kitchen or on display as a serving board for cheese, charcuterie, or fruit and veggies.

A scraper comes in handy for scooping chopped food into a larger bowl or cooking pot. Sometimes called a dough knife, it also divides dough cleanly.

Speaking of dough, a rolling pin can be simple or complex. Our version is inspired by a vintage French-style pin. It's a fun and fast turning project.

The final tool adds safety to getting items in and out of a hot oven. The push/pull tool keeps your hands away from hot racks.

These tools offer a couple of other benefits. They're a great introduction to woodworking for kids or anyone else new to the craft.

Finally, these simple projects offer plenty of opportunities for customizing. You can easily change up some of the design details or materials and end up with personalized items.

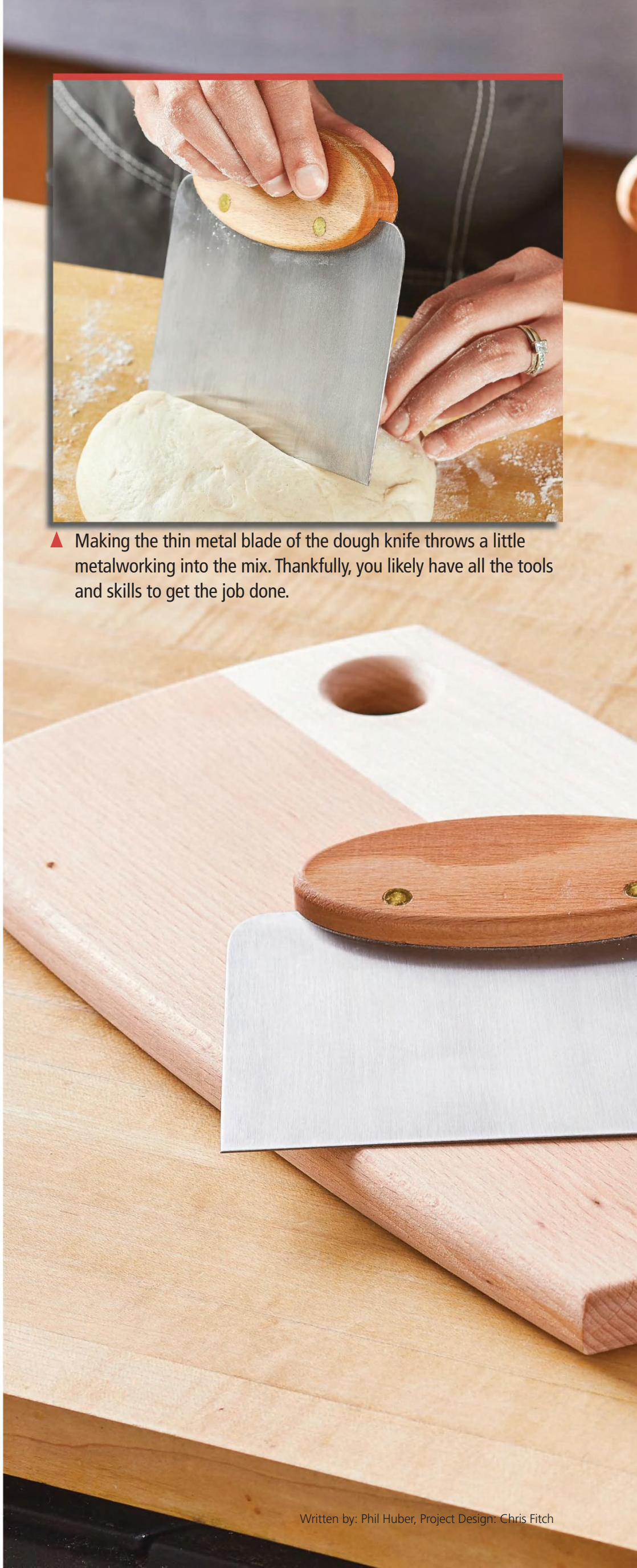

▲ Making the thin metal blade of the dough knife throws a little metalworking into the mix. Thankfully, you likely have all the tools and skills to get the job done.

Written by: Phil Huber, Project Design: Chris Fitch

▲ It's best to avoid reaching inside a hot oven. This tool includes a hook along the bottom for getting a solid grip on an oven rack to pull it out. And a notch on the end makes it easy to safely push it back in.

Illustrator: Becky Kralicek

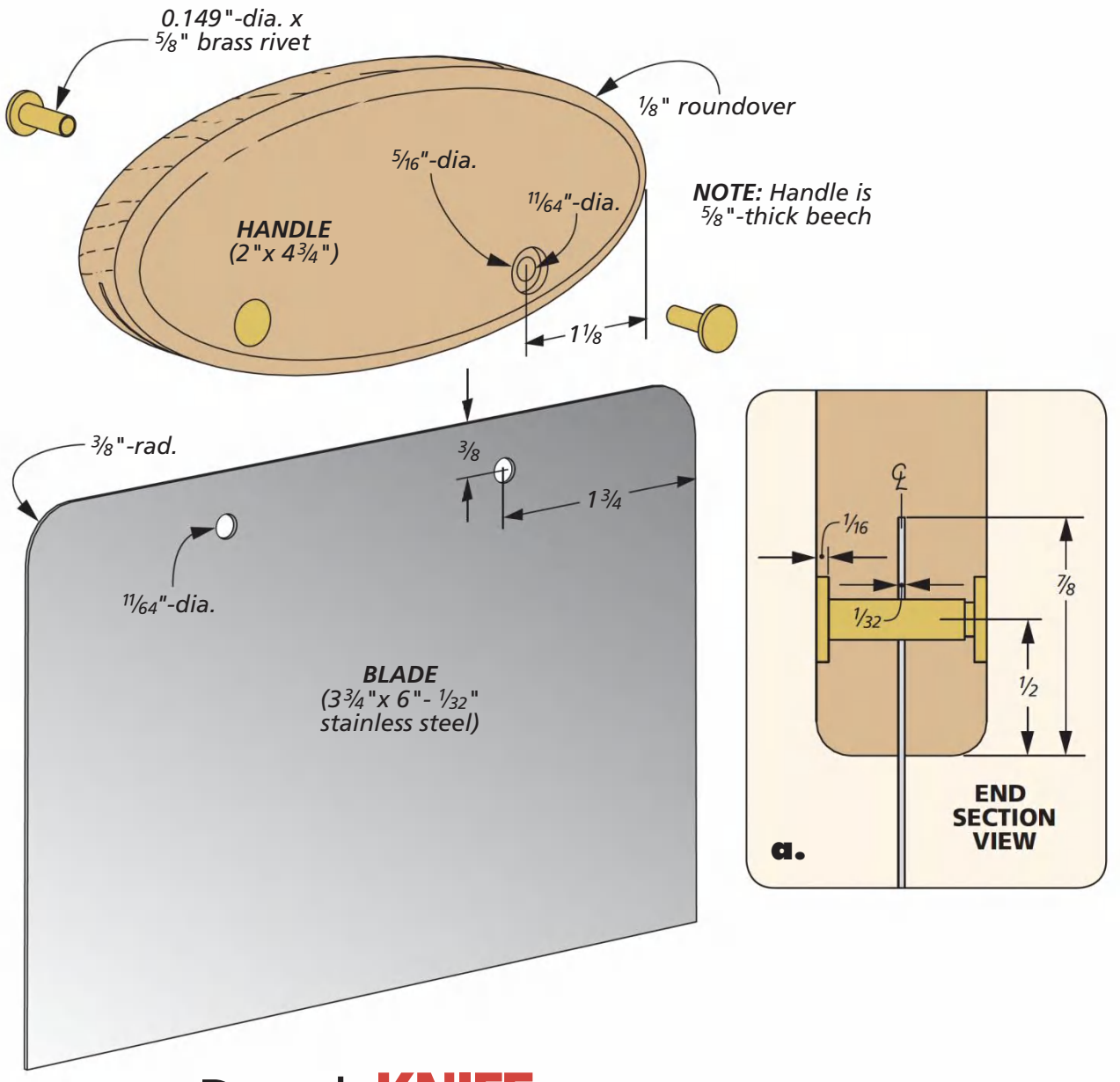

Dough KNIFE

There are only two parts on the dough knife: the handle and the blade. The starting point is making the handle. While it ends up as an easy-to-grip oval, you need to do a couple steps while it's a rectangular blank. First, drill the counterbored holes for the rivets that secure the blade. Stop blocks on the drill press fence allow you to locate the counterbores on each face, as in detail 'a.' Drill these with a Forstner bit. Then drill the through hole.

The other step to take is to cut the kerf for the blade (detail 'a' again). A band saw works well for this. Though a hand saw will give you a better fit.

The handle can now be cut to shape. Use the pattern online at *Woodsmith.com/252*. Or you can draw an oval freehand — or create your own design.

At the router table, ease the edges of the handle with a roundover bit. I applied a few coats of finish to the handle before adding the blade.

THE BLADE. The metal blade is formed from a blank of stainless steel. A fine-tipped permanent marker makes a distinct line on the blank. Cutting the metal with a hack saw is a little tougher than mild steel. You could also use an angle grinder with a cut off wheel.

Round the upper corners with a file, as shown in Figure 1. Then with a file and sanding block ease the edges of the blade to prevent accidental cuts. The holes in the handle serve as a guide to mark the holes in the blade. Clamp the blade to the table of the drill press to prevent it from climbing the bit.

Sand the blade up to 400-grit with silicon-carbide paper before securing it with the rivets.

SHAPE & SECURE THE BLADE

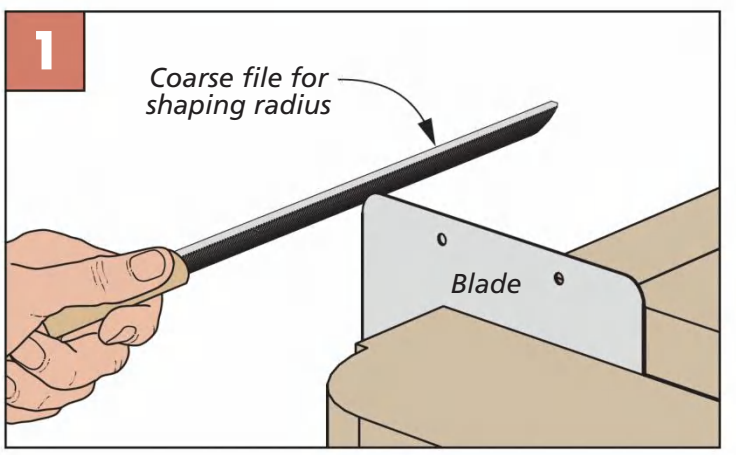

Round Over Blade. A coarse metal file shapes the radius on the corner of the blade. Then smooth out the file marks with sandpaper.

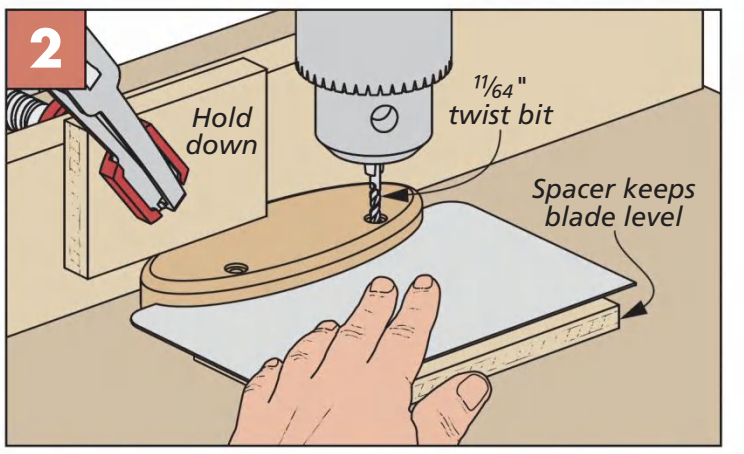

Drill Holes. The holes in the handle serve as a guide for locating the corresponding holes in the knife blade that accept the rivets.

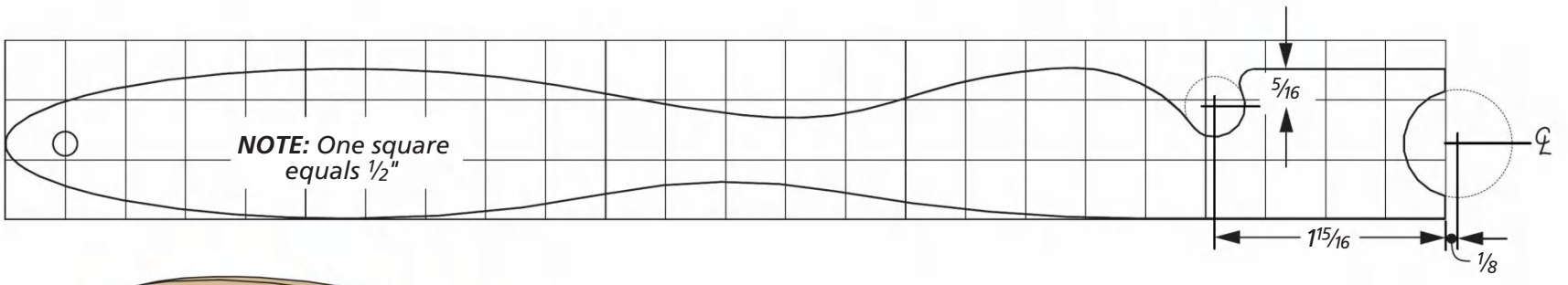

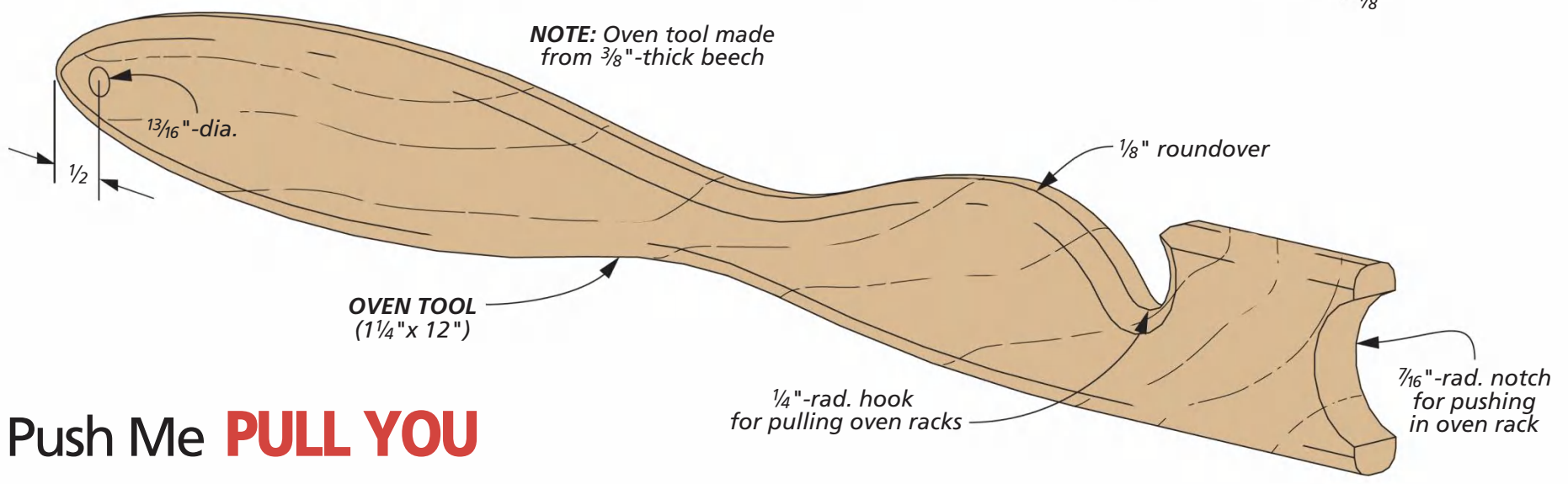

Push Me **PULL YOU**

One of my first steps into woodworking came in an "industrial arts" class in 7th grade. The instructor, Mr. Will, was a stickler for detailed, full-size drawings and wearing safety glasses even when we weren't using the power tools. One of our first projects was making a coaster using fir plywood and plastic laminate — it sits on my office desk to this day.

One of the other early projects was an oven tool. A hook on the end allows you to pull a rack out without getting burned. The end had a notch to push the rack back into the oven. Not sure where that one ended up. Maybe my mom still has it.

On the surface, it's a simple affair you could make in an hour or so. But there are some design details that are often overlooked.

HOOK & NOTCH. Let's start with the hook and notch. The hook to pull out the rack needs to be larger than the rack bar so it doesn't lock in place. The hook is set back from the end for strength. Otherwise, the grain could snap as you pull out a laden rack.

The notch up front likewise is a larger opening to easily catch on the rack without requiring sharpshooter aim. The curved profile prevents the tool from slipping off in use.

For both of these details, I prefer to shape them with a drill bit. It results in a clean, smooth shape that only requires a little finish sanding. The drawing below shows how to drill the notch on an extra-long blank.

HANDLE DESIGN. Creating the handle puts the focus on comfort and utility. Clearly, the handle should rest well in your hand. But it should also reinforce the two roles the tool plays: pushing and pulling oven racks.

You can see in the drawing above how the handle has an oval shape. When you're pushing on the tool, the swelling prevents the handle from slipping through your grasp.

The same concept applies when you need to remove a rack. The narrow waist provides a smaller grip to resist slipping in that direction.

Beyond these considerations, the final profile allows for customization. Or you can use the pattern at *Woodsmith.com/252*.

FORM THE NOTCH

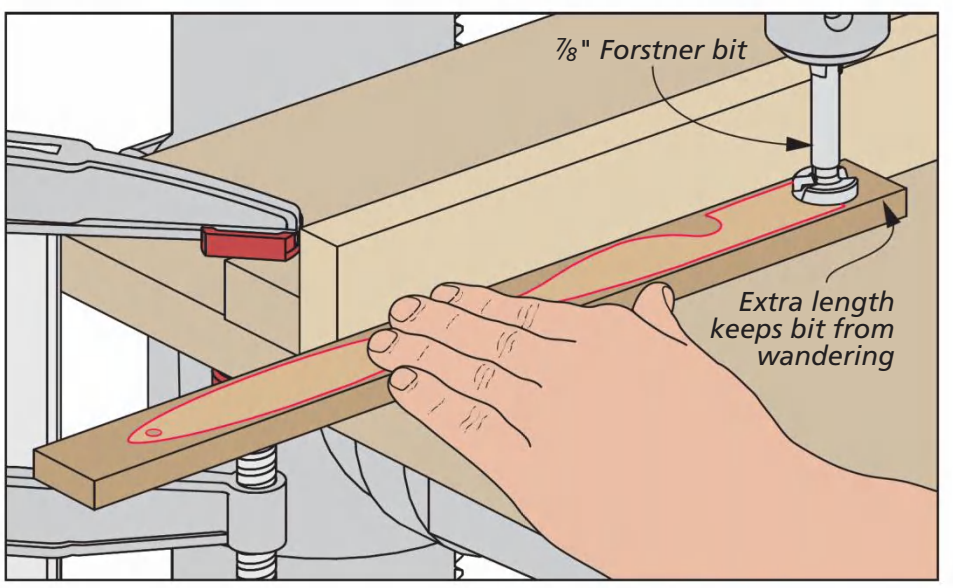

Drill the Notch. An extra-long blank gives a Forstner bit additional support for drilling out the notch on the end of the oven tool. Do the same for the hook section.

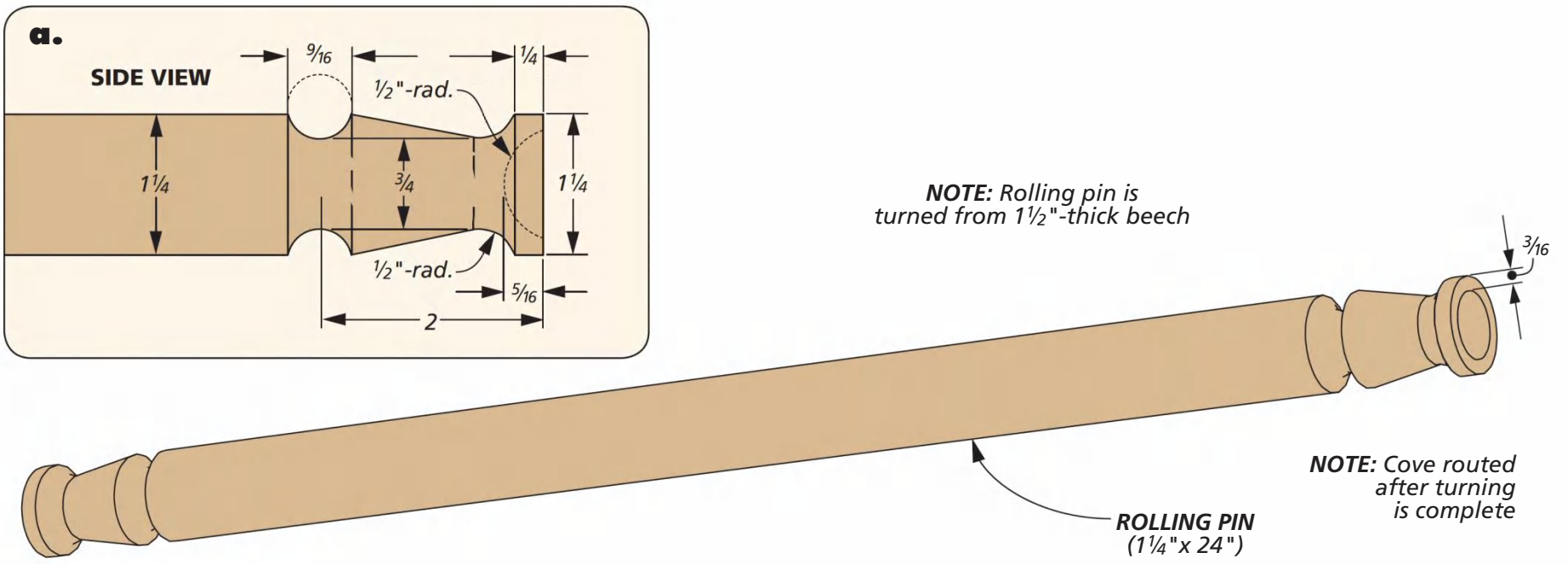

Rolling PIN

There are two primary styles of rolling pin: one where the roller spins on an axle attached to a pair of fixed handles. The other is a single-piece turning. The latter is the style of the rolling pin for this set of tools.

A project like this offers a solid double benefit. The obvious is that you end up with a practical item. The process of making teaches you focused techniques you can apply in other projects.

DESIGN AS GUIDELINE. Most of the work on this project takes place on the lathe. And whenever you start turning something, fixed dimensions and numbers become less demanding and more advisory.

For example, the major diameter of the rolling pin is 1¼", as shown in the drawing above. If yours ends up a bit larger or smaller, don't sweat it. The same goes for the profile details on the handles. Though I will say that aiming for the numbers makes good practice for learning careful work habits at the lathe.

A TURNING LESSON. The first step is to take a square blank and turn it into a smooth, consistent cylinder. Since I don't turn often, this is the intimidating part.

My approach is to make a series of evenly spaced grooves along the blank that match the final diameter. I used a square carbide turning tool for the cuts. A caliper set to the final diameter serves as a guide. This allows you to turn the now smaller areas between the grooves to match the grooves.

THE HANDLES. While the pin is turning, use a pencil and the dimensions in detail 'a' to mark the locations of the handle profiles. For these flowing shapes, I switched to a round end turning tool, beginning with the cove.

Establishing the cove defines one end of the handle taper. Make sweeping passes working your way down to the end of each handle.

When you're satisfied with the turning, sand away the tool marks working up to 220-grit.

ROUT THE ENDS. The final detail is to rout a cove in each end of the rolling pin. I did this at the router table, as shown in Figure 1 below. For a splash of color, I painted the coves. The rest gets a couple of coats of oil and wax.

COVE THE ENDS

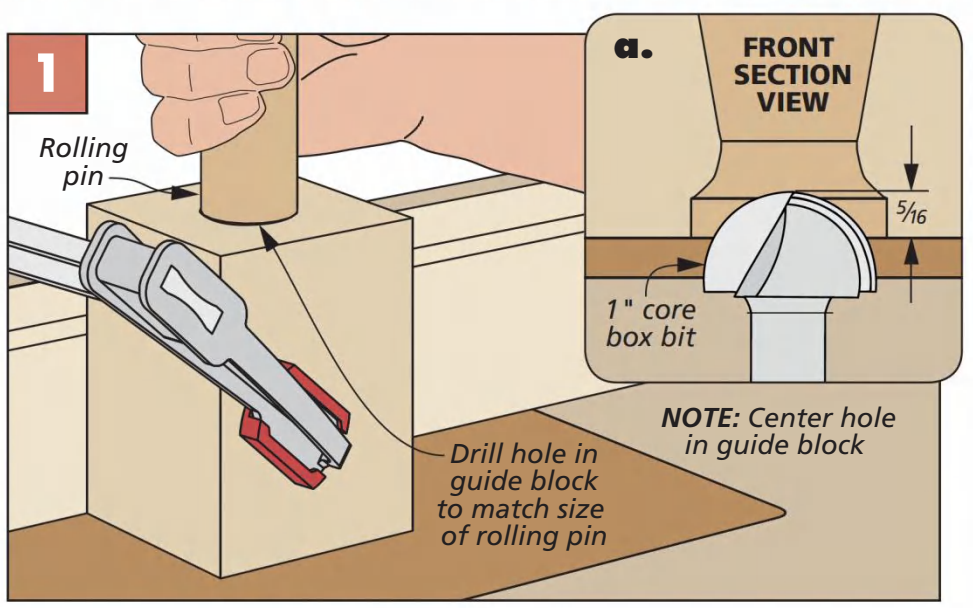

Hollowed Ends. Drill a hole in a thick block to guide the rolling pin to rout the end cove. Center the hole over the core box bit. Rout the cove with a plunge motion.

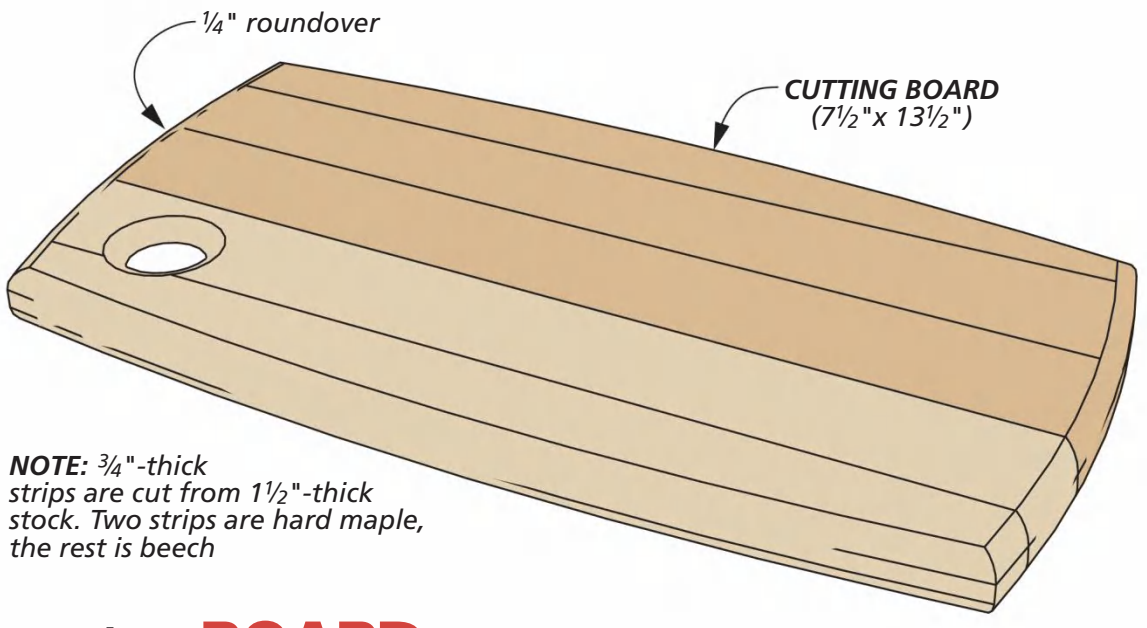

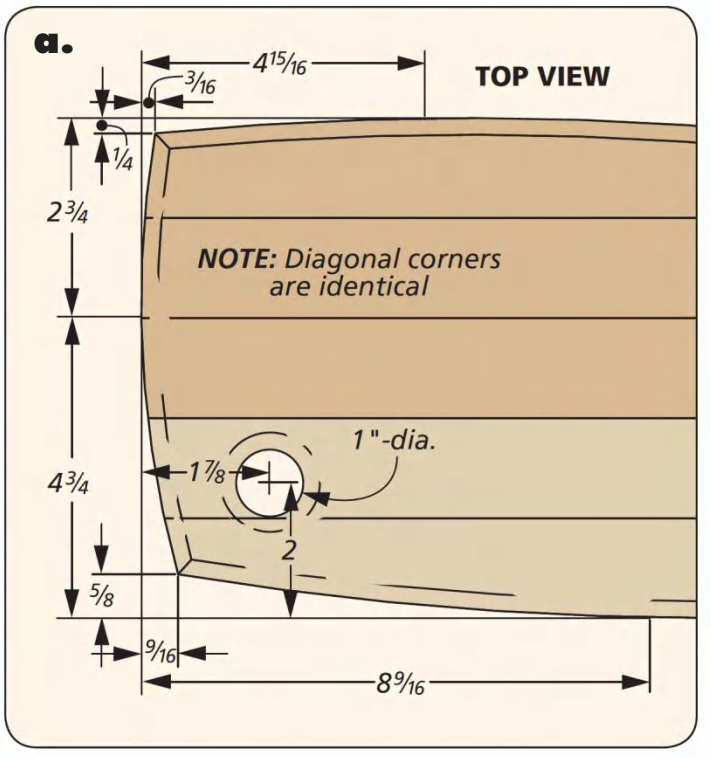

Cutting BOARD

Large cutting boards tempt woodworkers with an impressive work area and "Wow!" factor. However, smaller cutting boards like this one may be even more valuable.

Most folks have one primary prep area — thus they only need one large cutting board. However, for big meals or holiday gatherings, pulling out a spare cutting board or two can save the day. In addition, these smaller boards can double as on-table prep and serving pieces.

ALL IN THE DETAILS. While you could use a single board to make this size, there's plenty of room to add some flair. For starters, this one is made from maple and beech. The colors and grain textures go well together.

Even on a small scale, the usual best practices apply. Edge grain is more durable (and cleaner looking) than the plain sawn face grain. If you can find a wide board that will give you that much straight grain, go for it. Most of the time, I end up gluing up the two different sections of the cutting board.

RIP & FLIP. Figure 1 below shows my approach. Working with thick stock, rip narrow strips from each edge. The width of the strips should be slightly more than the desired thickness of the board. Flip the strips on their sides to reveal straight-lined edge grain.

I glued each section of the cutting board together separately. I find this allows me to focus on keeping just one or two glue lines flush at a time. By the time you glue the two "halves" together, you shouldn't have much flattening to do.

DRILL & SHAPE. Lay out and drill the hole while the board is still a rectangle. From here, you can draw in the finished shape. Pro Tip: If you plan on making several of these (they make great gifts!), make a template from hardboard or plywood.

Cut the shape at the band saw and then use a spokeshave or an edge sander to smooth the ends and edges. At the router table, round over all the edges, including the hole.

After a final sanding, the board is ready for your choice of food-safe finish. I used a mineral oil-beeswax blend. Then it's time to head back to the kitchen. W

GET THE RIGHT GRAIN

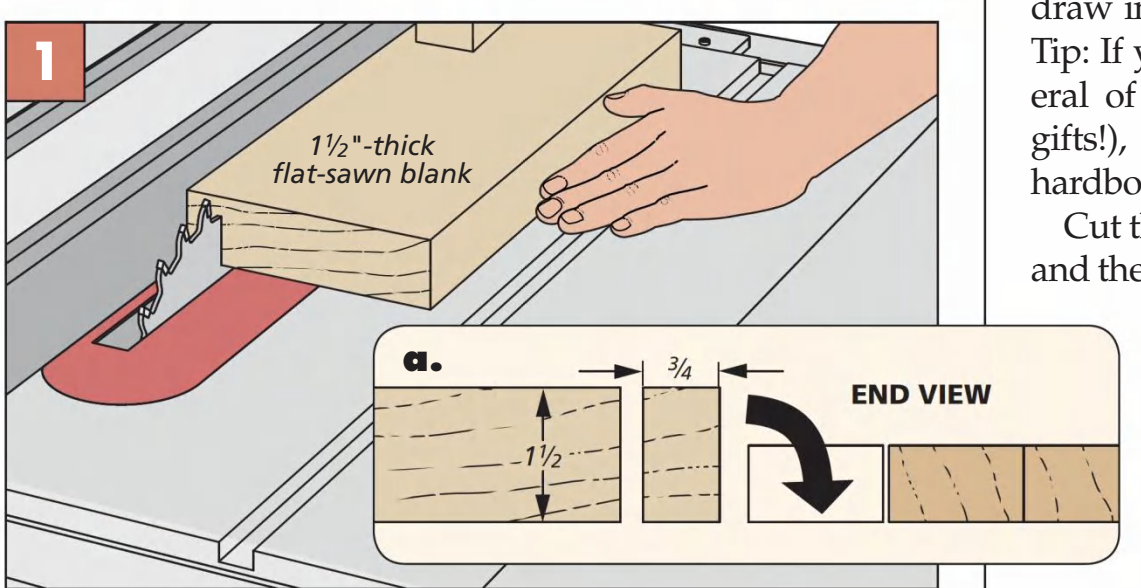

Create Edge Grain Strips. The sides of thick, flat sawn boards reveal straight edge grain. Rip narrow strips from the blank and flip them over to create durable faces for the cutting board.

Written by: Logan Wittmer; Project Design: Dillon Baker

Sea Chest

This versatile sea chest is just at home in your shop packed with tools as it is in a bedroom storing an extra set of linens.

In the past, a sea chest (or seaman's chest) was used by sailors to store their personal property such as clothes and toiletries. Now, I don't know many lucky ducks who get to spend their lives on boats and need a sea chest, but that doesn't mean you can't give yourself the experience of building this fun piece of history.

FUNCTIONAL CONSTRUCTION. One thing that's fascinated me about utility pieces of furniture, such as a sea chest, is the no-nonsense construction techniques that are used to build them. And our designer, Dillon Baker, kept with that theme. A solid-wood case is assembled with rabbets, and the tongue and groove bottom is nailed directly to the case. This would make it easy for the sailor to replace the bottom if the slats got wet and started to become compromised.

THE GUTS. Just because the construction techniques are pure utilitarian, doesn't mean the inside can't be user friendly. The inside of the case is broken up with a couple of sliding tills. The till construction, like the case, is pure utility. The tills slide on runners so you have easy access to all of the items stored within.

WALNUT DETAILS. Of course, we couldn't build a pure utility piece without adding some pizzazz. In this case, we added walnut trim around the bottom and top ends of the chest. In addition, the walnut handle block and rope becket tie everything up in a pretty bow.

▼ The addition of a pair of sliding tills on the inside of the chest adds increased storage options. In a shop, they hold often-used, often-buried, hand tools. In the house, they store small items that you want to easily access.

Illustrations: Dirk Ver Steeg

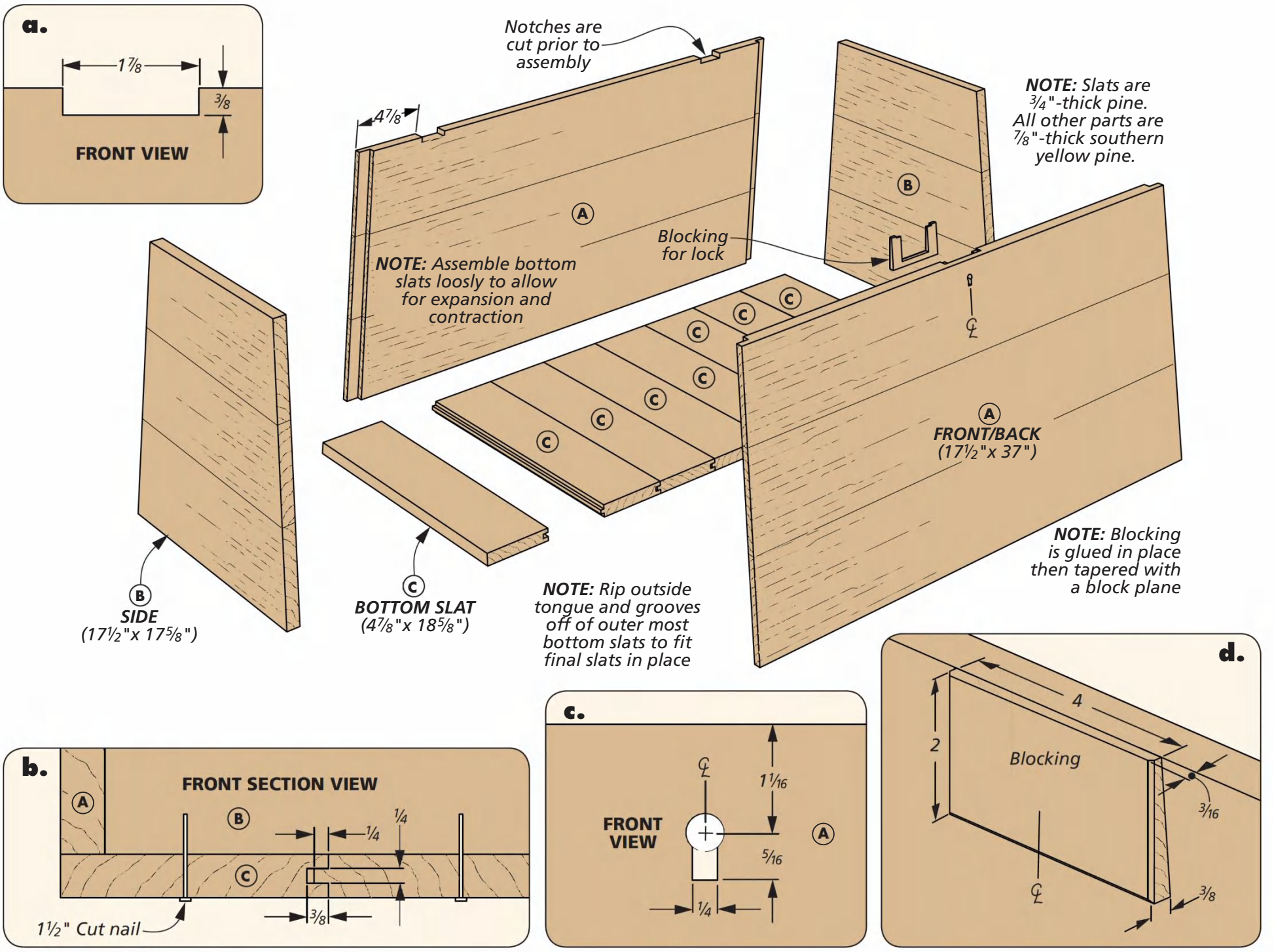

A Slanted **CASE**

As I mentioned before, the case for the chest is built from solid wood. The southern yellow pine is lightweight and we planned to paint it. The drawing above will give you general guidance on the path that this sea chest takes.

START WITH THE CASE. Building the case is the first order of business. Because the case is fairly deep, you'll want to glue up the stock to create the front, back and sides. You might as well glue up the stock for the top that you'll make later as well.

Use a dado blade buried in an auxiliary fence to cut the rabbet along each end of the front and back panel (Figure 1, next page). Guide the panel with a miter gauge if you need extra control.

Now, you can cut the front and back to size. Before making a cut however, note that the front and the back of the chest slant inwards. This means the top and the bottom edges need to be beveled to compensate for this lean (Figure '2a' on the next page).

When it comes to cutting the sides to size, they'll need to be tapered from top to bottom. You can do this at the table saw with a taper jig or with a circular saw and straightedge guide. It's dealer's choice here.

HARDWARE WORK. Before assembling the case, there's more work to do on the front and back panels that's easier to do without the case glued up. First, the back panel has two notches for hinges. You can see these in detail 'a.' You could stand this up at the table saw and cut them with a dado blade (use a tall auxiliary fence to help support the workpiece). However, this is the perfect time to break out a crosscut saw and a chisel and go to town. Use the handsaw to create the walls of the notch first, then chisel out the remaining waste. A router plane or file will help you get a smooth bottom on the notch.

On the front of the case, you'll want to add blocking onto the lock location to make it thicker and compensate for the angled front. Then, use a router to rout out the mortise for the chest lock (Figure 3). Use your lock as a

MAKING THE CASE

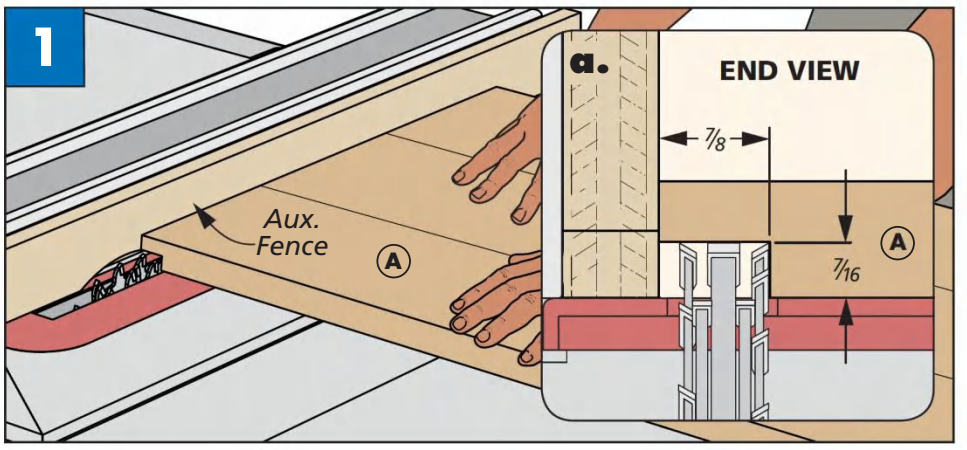

Rabbet. Bury a dado blade in an auxiliary fence and cut the rabbet on the ends of the front and back panels. Make the rabbet in two passes, moving the fence between passes.

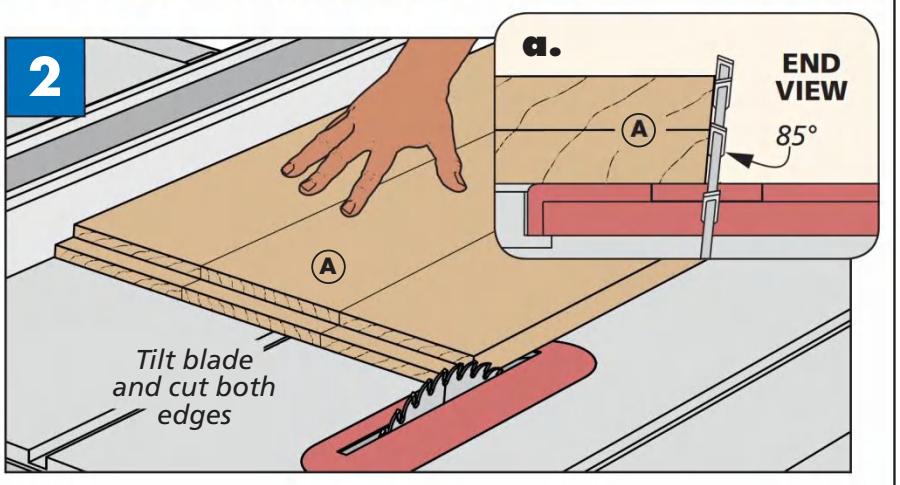

Bevel Top & Bottom. Tilt a ripping blade 5° and make a cut to form a bevel along the top and bottom edges of both the front and back panels.

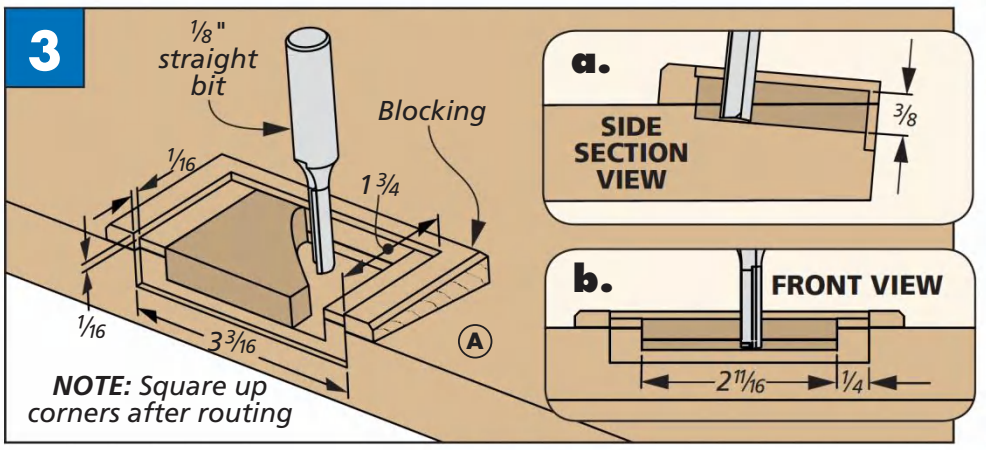

Rout The Lock. Use a straight bit in a palm router to rout out the mortise where the lock will be installed. Use a chisel to define the outer, shallow mortise and remove the waste with a router plane.

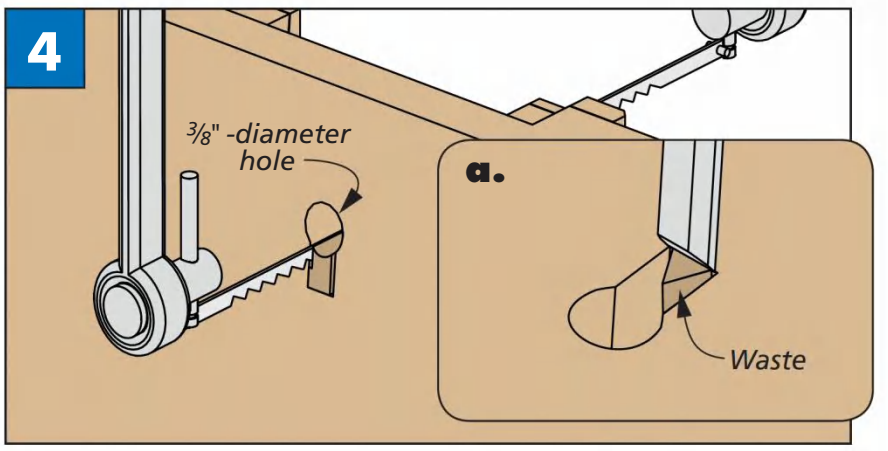

Keyhole Slot. Define the keyhole with a drill bit. Then, use a coping saw to cut down the sides of the slot. Finally, chop out the waste between the kerfs with a chisel.

template, and after the mortise is routed, use a drill bit to drill out the key hole. A coping saw with a blade will help you create the keyhole slot in the front, like you see in Figure 4. With the lock mortise done, you can assemble the case with glue and clamps.

SLAT BOTTOM. The bottom of the case is made from pine as well, and is a series of slats running from front to back. The slats are locked together with a tongue and groove. This can be cut at the table saw using a dado blade. Cut the grooves along one edge of the slats first, then fine-tune the tongues to fit in the grooves.

Make small adjustments here, as you'll be making passes along both sides of the tongue. When the slats all fit together, you can assemble them and nail them onto the bottom of the case (detail 'b' on previous page).

RUNNERS. The final task on the case to take care of is to lay the "tracks" for the sliding tills. You'll do that by adding the wood runners for the tills to the inside of the case (detail 'a').

These are made from solid wood and are simply glued in place. To keep the runners from slipping and sliding around as the glue dries, I would suggest taking a note from traditional furniture makers — use a cordless pin nailer and shoot a couple pins in each. With the case pretty much wrapped up, it's time to add some of the decorative trim.

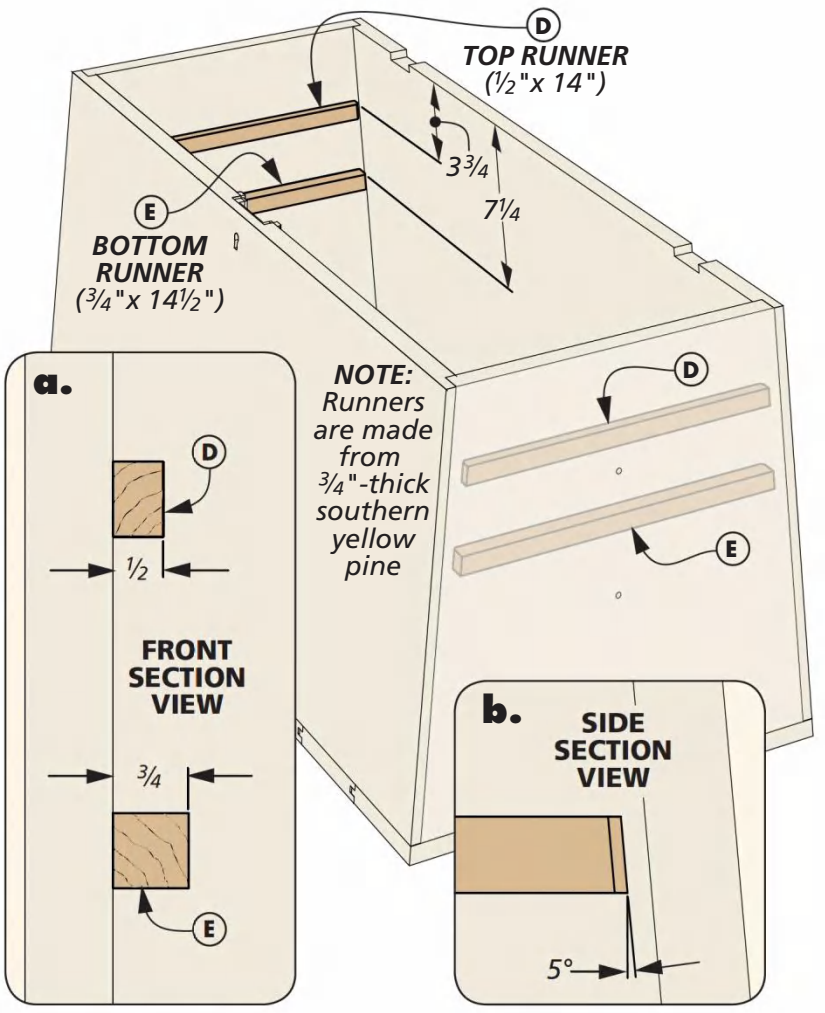

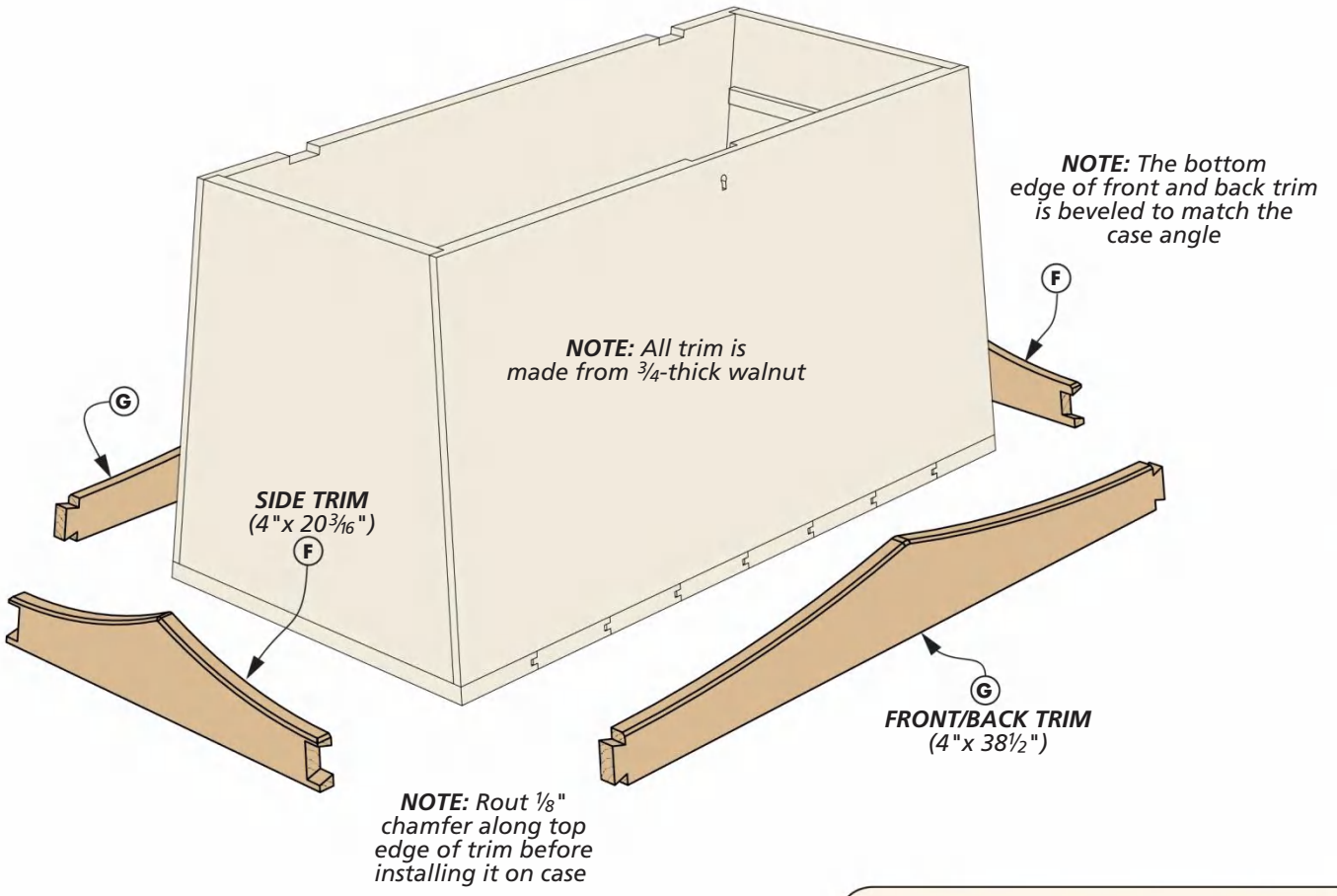

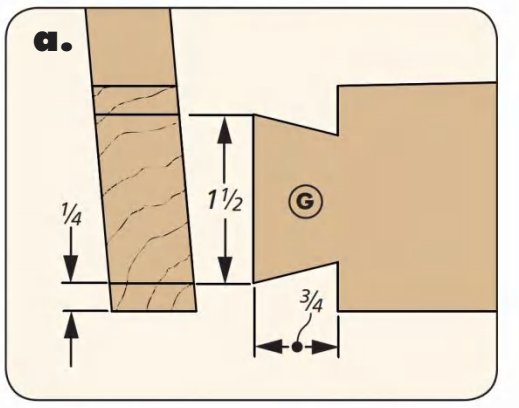

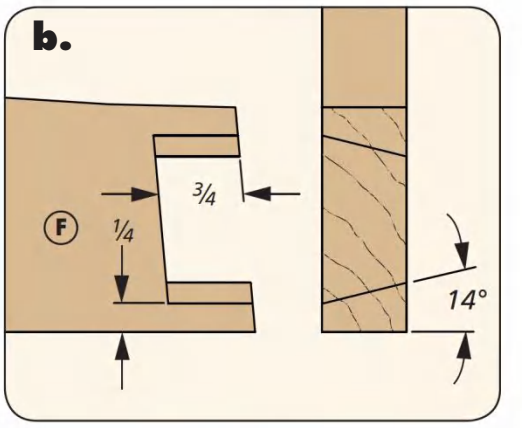

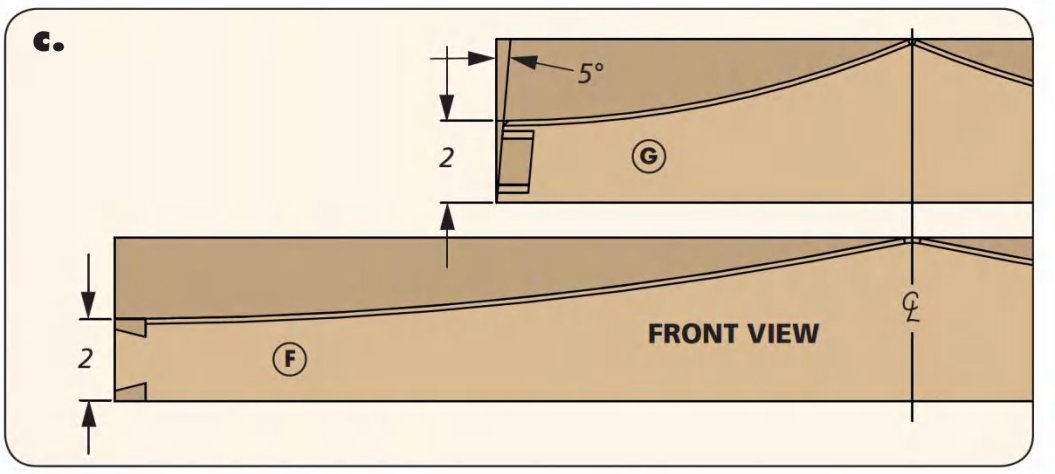

Dark, Rich **TRIM**

The case of the chest is trimmed in hardwood. Here, we used walnut. The trim has a few purposes aside from looking good. First, it hides the exposed end grain of the bottom. This shields them (somewhat) from absorbing water. Because, you know, ships can be wet. Second, the dovetailed corners on the trim add additional structural strength to the case of the chest.

CUT TO SHAPE. Before ever thinking about the angled dovetails (they're not too hard, don't worry), start by planing the stock to thickness and ripping it to width. As with the case, the bottom edge of the front and back trim is beveled.

I suggest making a hardboard template for the profiles of the front, back, and side trim. This will allow you to rough cut the profile at the band saw and clean it up using the template at the router table. Just be careful, because the peak of the profile will cause you to be routing against the grain a little bit. Go super slow and take light passes to avoid chip out.

ANGLED DOVETAILS. With the shapes cut, let's tackle the dovetails. Start by positioning the side pieces of trim in place, and scribe the angle of the case onto the inside of the trim. This will become the baseline for the pins.

Usually, I play for the "cut the tails first" team, but in this

HAND-CUT DOVETAILS

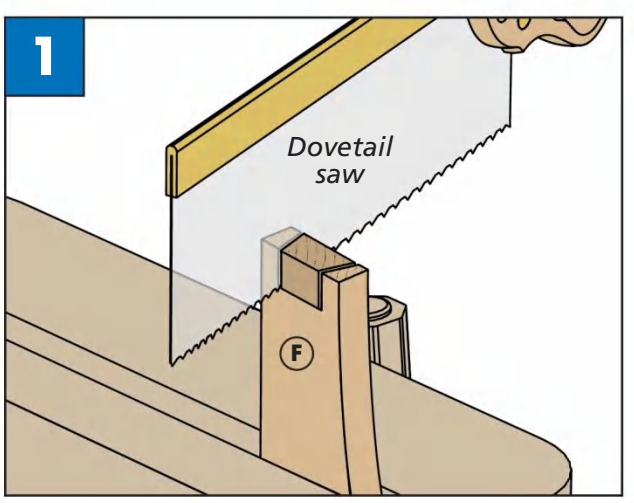

Cut Dovetails. Use a dovetail saw to cut the dovetails. Start by cutting the pins first, on the end trim.

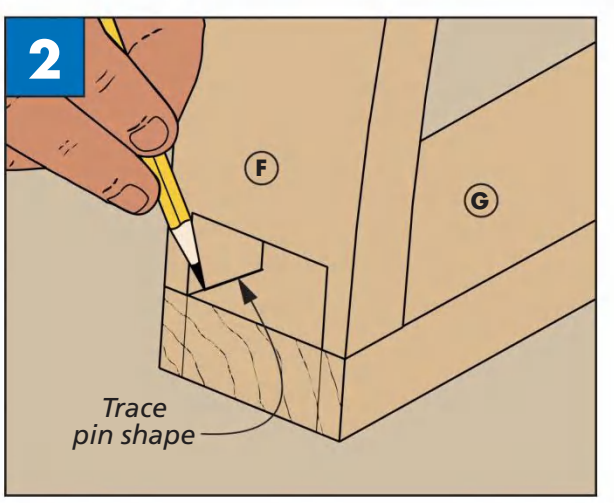

Tails Next. After cutting the pins, stand the end trim on the front trim. Use a sharp pencil to transfer the shape.

instance, I think it's best to lay out and cut the pins first (Figure 1 on previous page).

After cutting the pins, (they will look funny with the angled baseline), lay the front trim on your bench and stand the end trim in place. Transfer the pin shape to the front trim with a long marking knife or sharp pencil (Figure 2). Then, it's a simple matter of cutting the tails.

After you've test fit the entire trim and ensured it fits correctly, it's ready to be glued in place on the case. A note here: if you're planning on painting your case like we did, I would suggest painting it before adding any of the hardwood trim. It will cut down on the masking. Just leave some "paint free" zones where the trim gets glued on to ensure a good bond. Speaking of which, you can glue the trim in place and sand the proud ends of the dovetails flush.

HANDLES. The handles for the chest are made of rope and attach to handle blocks. Create the handle blocks by cutting the shape out of hardwood stock. Drill a hole for the rope before tapering the profile on the band saw. Then rout the outside edge with a small chamfer. You can glue the handle block onto the case, and attach it with a couple of screws from the inside.

FANCY ROPE WORK. Personally, I think the rope handle on this chest makes the look. It's a subtle nod to the nautical origins of this chest. To make it, use a piece of hemp rope and cut it to length. After inserting it through the hole in the handle block, you'll unravel the strands of rope from each end. In a small "twist" of fate, you'll re-ravel the rope back onto itself marrying the two ends together. It sounds complicated, but it isn't. There's a video up on *woodsmith.com/252* showing the entire handle making process in further detail.

After splicing the circle together, you can finish it off. Do this by whipping the handle with some paracord, making a nice, tight coil. We chose a paracord that matched the case color.

ROPE WORK

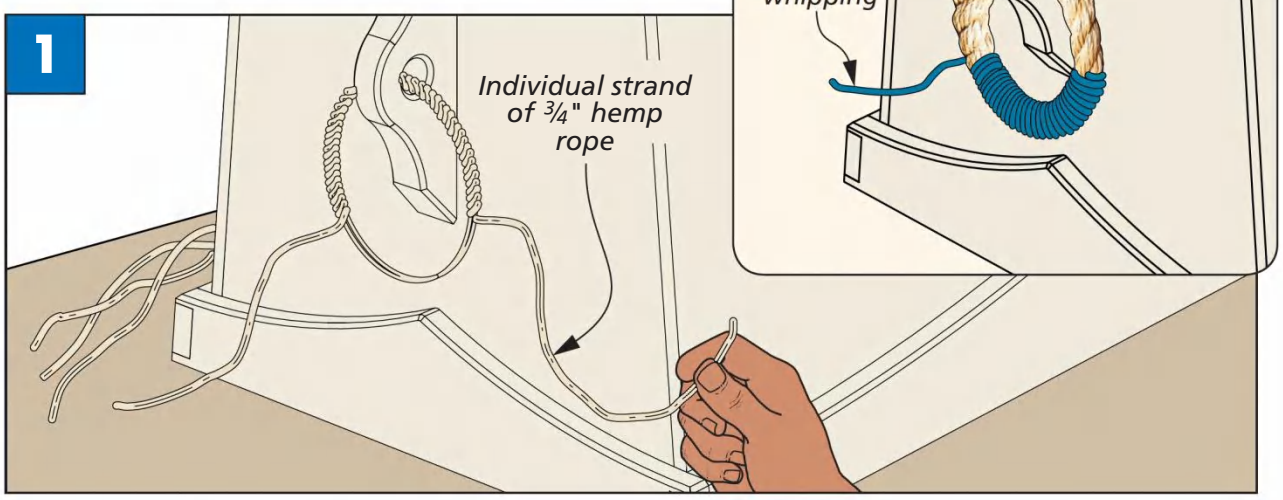

Uncoil & Recoil. Using a three strand hemp rope, uncoil a few inches of each end into the individual strands. Then, insert the rope through the handle. Recoil the ropes together, interlacing the ends. Finish with a paracord wrapping.

GO 2 Online Extras

For a video on creating the rope handle, go to:

Woodsmith.com/252

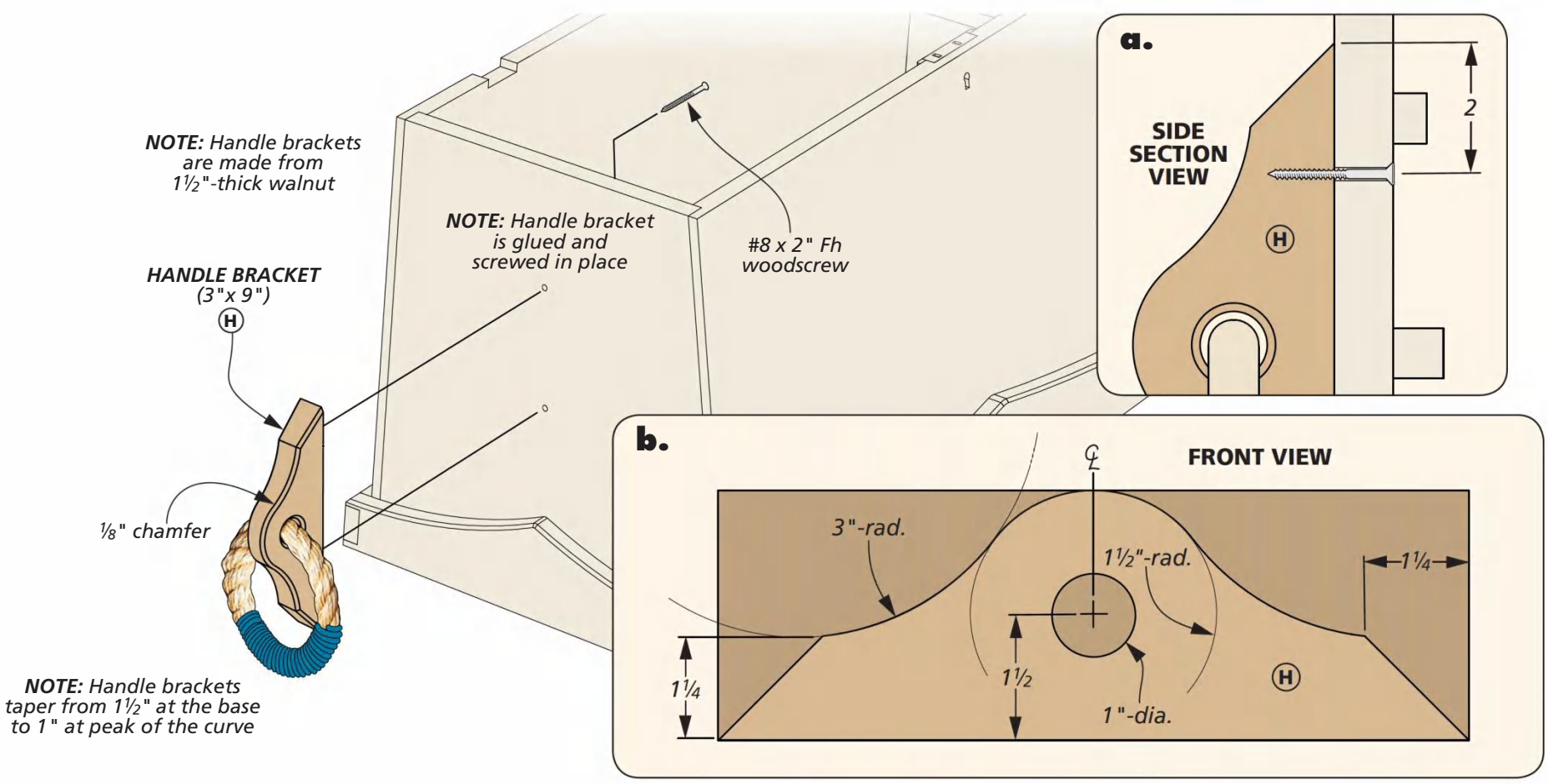

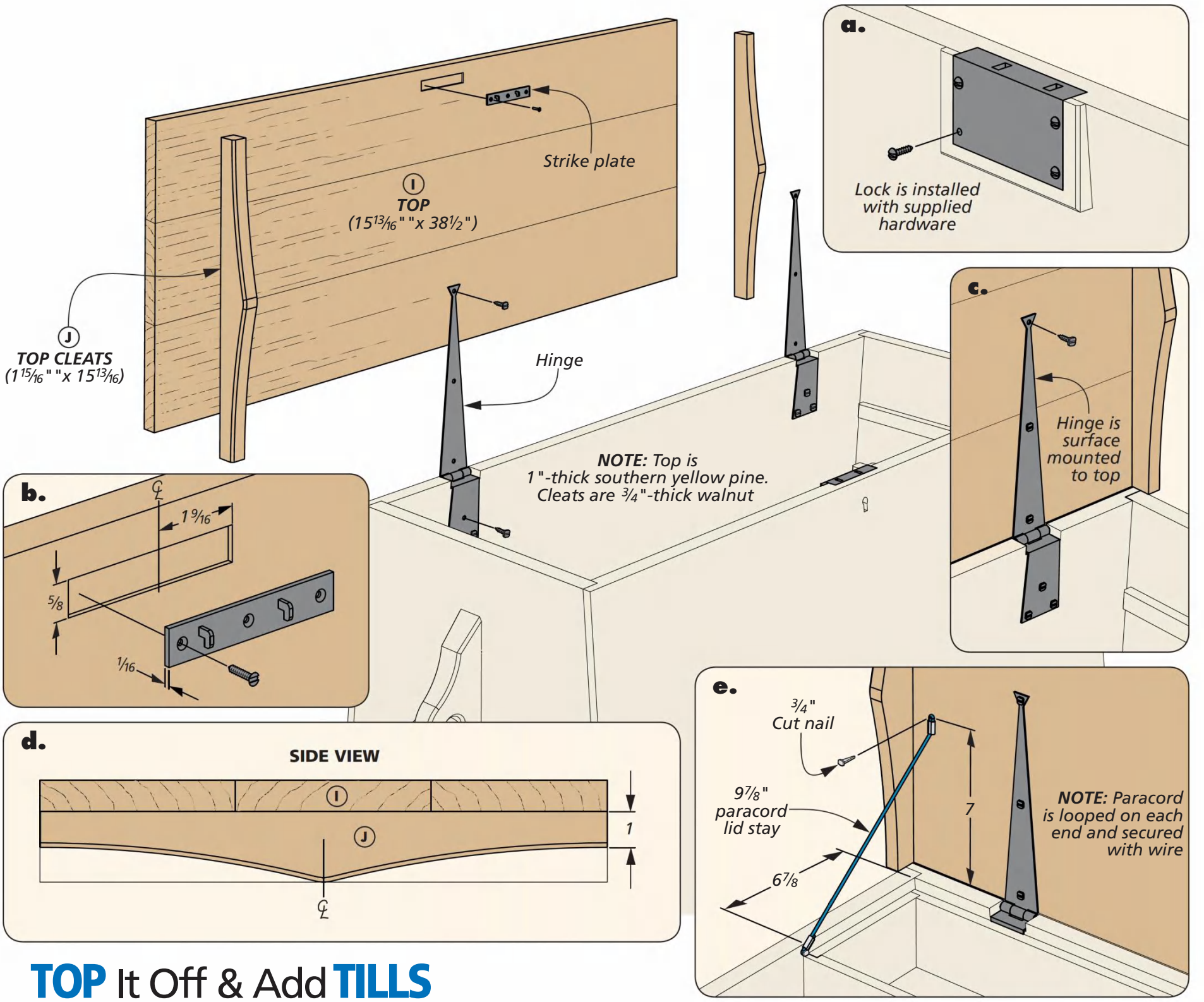

TOP It Off & Add TILLS

To bring it home, the top is next. You'll finish it off by adding the sliding tills. The top follows a lot of the same steps that you've already done, so let's start there.

WIDE PANEL. If you followed my advice before, you'll already have the top panel glued up. The first thing to do is to cut it to final size. You can see these dimensions in the drawing above. Install the hinges on the case and temporarily fasten the lid to the hinge with a single screw in each. What you're doing here is locating the lock strike plate on the lid. Use a pair of sharp, short screws in the strike plate to mark the location, then you can mortise it in. Personally, I use a marking knife and router plane to do this.

FINAL TRIM. The final pieces for the top are to add the top cleats. These mirror the bottom trim and are made the same way. Glue them in place and then you can install the lid.

SLIDING TILLS

The sliding tills are the perfect place to store small items, or tools that you use all of the time. They're made out of thinner yellow pine, and unlike the case, are straight and square.

RABBET CONSTRUCTION. The tills are built using rabbets. Cut the front, back and sides to size. The front and back have a small finger notch in them to aid sliding the tills. I created this by clamping a sacrificial board to the edge of the workpiece and drilling through both pieces with a Forstner bit. Clean up any tool marks with a sanding drum or a dowel wrapped in sandpaper.

At the table saw, use a dado blade buried in an auxiliary fence to cut the rabbets at the ends of the front and back. Then, you can glue the tills together. Again, a couple of pin nails in each joint

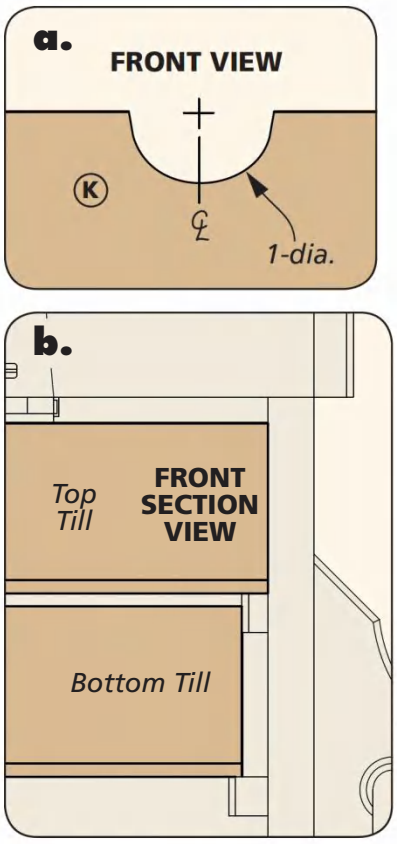

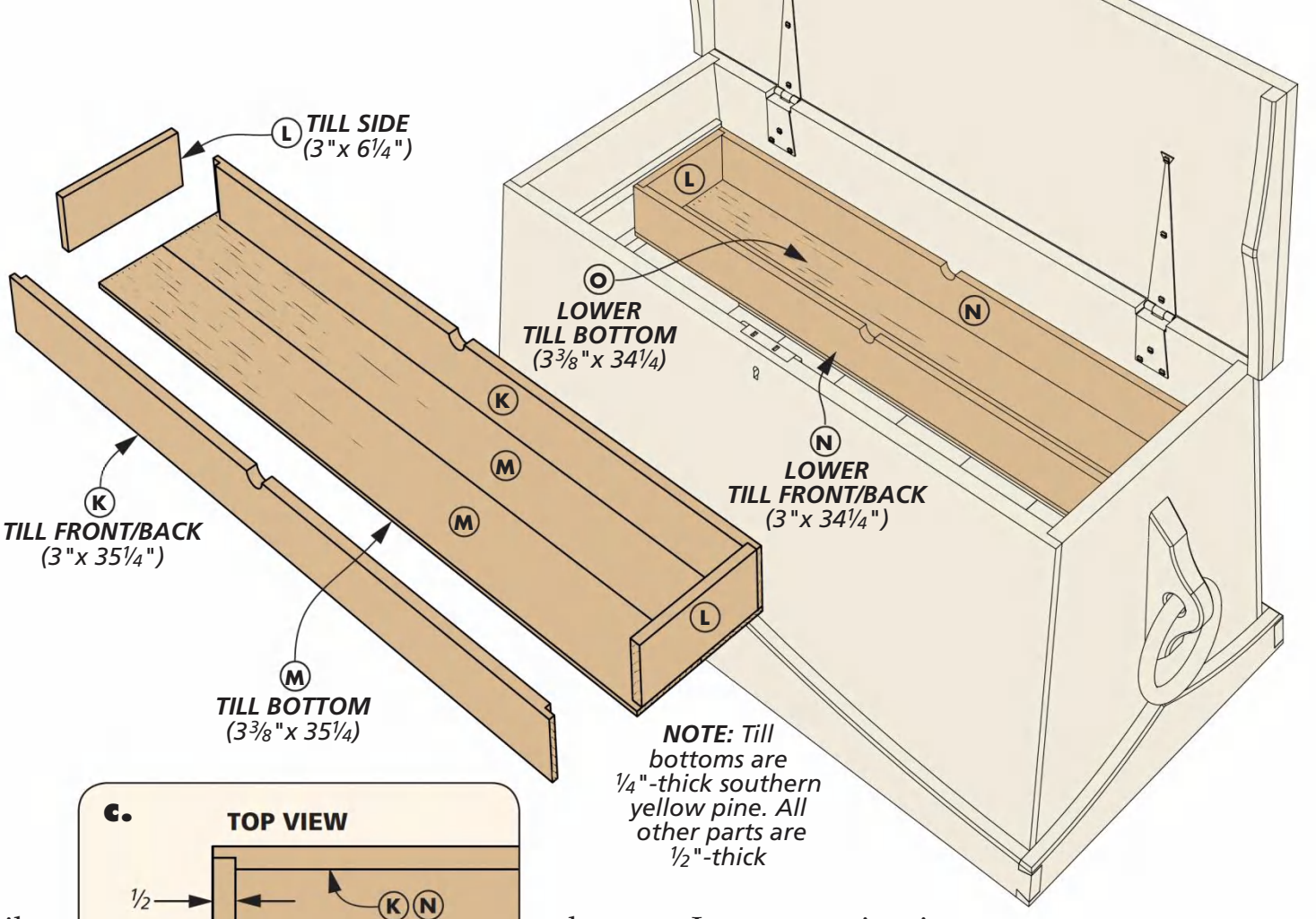

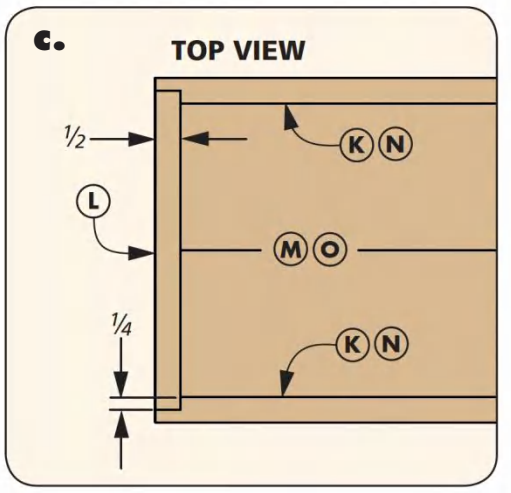

will keep them together while the glue dries.

PLANK BOTTOM. Like the case, the bottom of the tills are completely utilitarian. They're simply thin planks nailed to the bottom of the till. This means that they will be easy to replace if it's ever needed. In addition, the flat bearing surface makes them slide across the runners just a little easier as well.

With the tills in place, (and maybe a little paste wax to ease the sliding action), the chest is complete. I must say, the more and more I look at this sea chest, the more I can appreciate it as a tool chest. I was a little apprehensive when it was suggested to use it as such instead of a "blanket" type chest. However, the size is perfect to sit next to the workbench and hold a lot of tools. Plus, the sliding tills keep all of your most used hand tools within reach. But, it still makes the perfect storage vessel for any room in your house ... or your life at sea. W

Materials, Supplies & Cutting Diagram

A	Front/Back (2)	⅞ x 17½ - 37
B	Sides (2)	⅞ x 17½ - 17⅝
C	Bottom Slats (8)	¾ x 4⅞ - 18⅝
D	Top Runners (2)	¾ x ½ - 14
E	Bottom Runners (2)	¾ x ¾ - 14½
F	Side Trim (2)	¾ x 4 - 20 3/16
G	Front Trim (2)	¾ x 4 - 38½
H	Handle Bracket (2)	1½ x 3 - 9
I	Top (1)	1 x 15 13/16 - 38½
J	Top Cleats (2)	¾ x 1 15/16 - 15 13/16
K	Top Till Front/Back (2)	½ x 3 - 35¼
L	Till Sides (4)	½ x 3 - 6¼
M	Top Till Bottoms (2)	¼ x 3⅜ - 35¼
N	Lower Till Front/Back (2)	½ x 3 - 34¼
O	Lower Till Bottoms (2)	¼ x 3⅜ - 34¼

- (16) 3d Cut nails
- (2) ¾" Cut nails
- (4) #8 x 2" Fh Woodscrews
- (1) ¾" x 36" Hemp rope
- (1) 22' Paracord

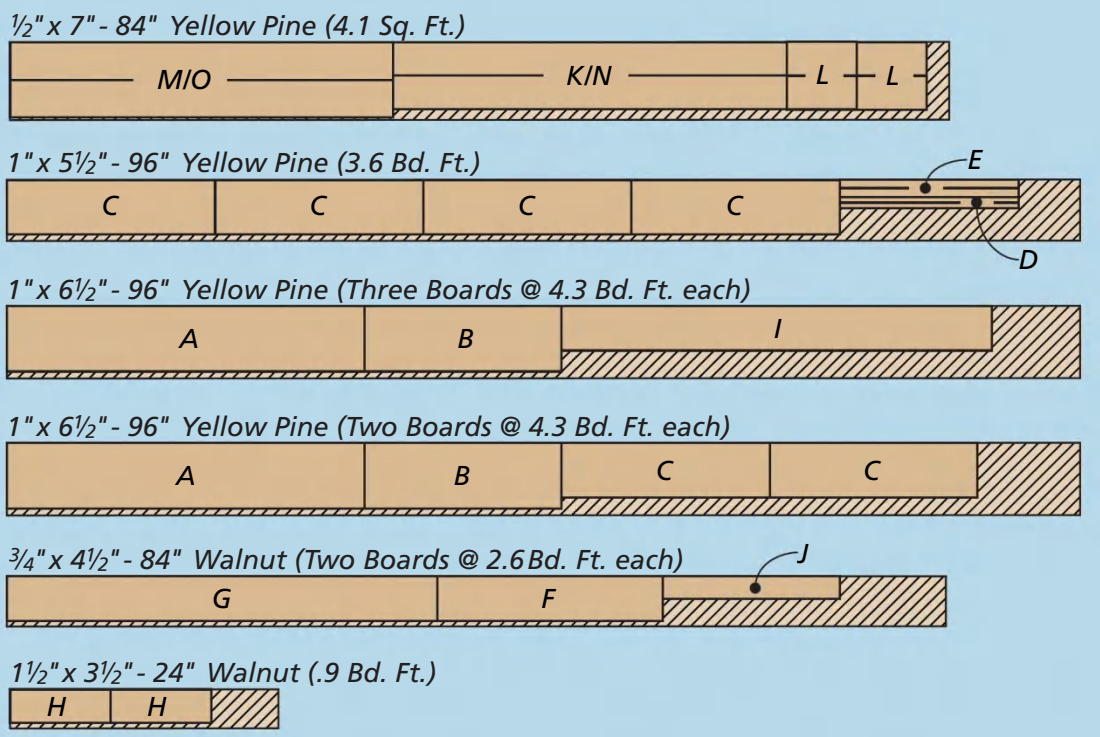

HEIRLOOM
Project

Tall Clock

Making the face of the clock means that it can be as simple or complex as you want. Here, we've made an aluminum and brass face that blends well with the Prairie style of the clock.

The optional gridwork door further adds to the Prairie style. It takes a little time to make, but the payoff is well worth it. Instructions for building it can be found on *Woodsmith.com/252*.

Written by: Logan Wittmer; Project Design: Chris Fitch

This grandfather clock takes design cues from the Prairie style of architecture. Its timeless look means it will fit into nearly every décor and is a piece of furniture that can't be ignored.

If you follow *Woodsmith* on social media, or our podcast, you may have heard me mention that I love making clocks. Not sure I know why that is. In the realm of clocks, the grandfather clock is the mac-daddy and has always been a "bucket list" project of mine. Unfortunately, the traditional, often "over the top" style of a grandfather clock doesn't fit into our home décor. But, when I saw the design that Chris Fitch came up with for this clock, it might just work its way into my house.

FRANK LLOYD WRIGHT CUES. As you can see from the main photo, this isn't your typical grandfather clock. With its clean lines and modern design, this clock takes many of its design cues from architect Frank Lloyd Wright. Many refer to this look as the "Prairie style." Not only has this style been popular in architecture, but in furniture design as well.

SOLID CONSTRUCTION. In true *Woodsmith* fashion, the designer of this clock, Chris Fitch, chose to use solid wood for the majority of the case work, but mixed in some plywood where it makes sense. This means that the construction (which is stub tenon and groove) is going to last, but is also straightforward to make.

Of course, you wouldn't want to build a clock such as this and skimp on the movement or the face. So, we've selected a quality mechanical movement, along with a shop-made pendulum arm and bob. And while you're making the arm, you might as well make the face also. Overall, it's a project that I'm excited to build.

Materials, Supplies & Cutting Diagram

A	Front Posts (2)	1½ x 1½ - 66	**K**	Riser Front (1)	¾ x 3 - 15	**U**	Door Bottom Rail (1)	1 x 4 - 14
B	Back Posts (2)	1½ x 2½ - 66	**L**	Riser Back (1)	¾ x 3 - 13½	**V**	Bottom Door Stiles (2)	1 x 1½ - 45 13/16
C	Stiles (4)	¾ x 2⅛ - 66	**M**	Base (1)	½ ply - 10¼ x 14	**W**	Glass Stop (1)	5/16 x 5/16 - 452rgh
D	Back Rails (2)	1 x 4 - 14	**N**	Face (1)	¼ ply - 12½ x 20	**X**	Supports (2)	¾ x 2⅜ - 12¼
E	Top Rails (2)	¾ x 1¾ - 4	**O**	Top Plate (1)	½ ply - 10¼ x 14	**Y**	Shelf (1)	¾ x 2⅜ - 10
F	Bottom Rails (2)	¾ x 4 - 4	**P**	Plate Trim (1)	¾ x 1½ - 37rgh	**Z**	Arm (1)	9/32 x ⅝ - 30
G	Back (1)	½ ply - 13½ x 59¾	**Q**	Top Fillers (3)	½ ply x 11 - 15½	**AA**	Bob (1)	¼ x 2½ - 4½
H	Caps (2)	½ ply - 10¼ x 14	**R**	Top Trim (1)	¾ x 1½ - 41rgh	**BB**	Bob Brackets (3)	⅜ x ¾ - 2
I	Trim (1)	½ x 1 - 75rgh	**S**	Door Rails (3)	1 x 1½ - 14	•	(16) #8 x 1¾" Fh Woodscrews	
J	Riser Sides (2)	¾ x 3 - 10¾	**T**	Top Door Stiles (2)	1 x 1½ - 20	•	(1) 12" x 12" x ⅛" Brass stock	

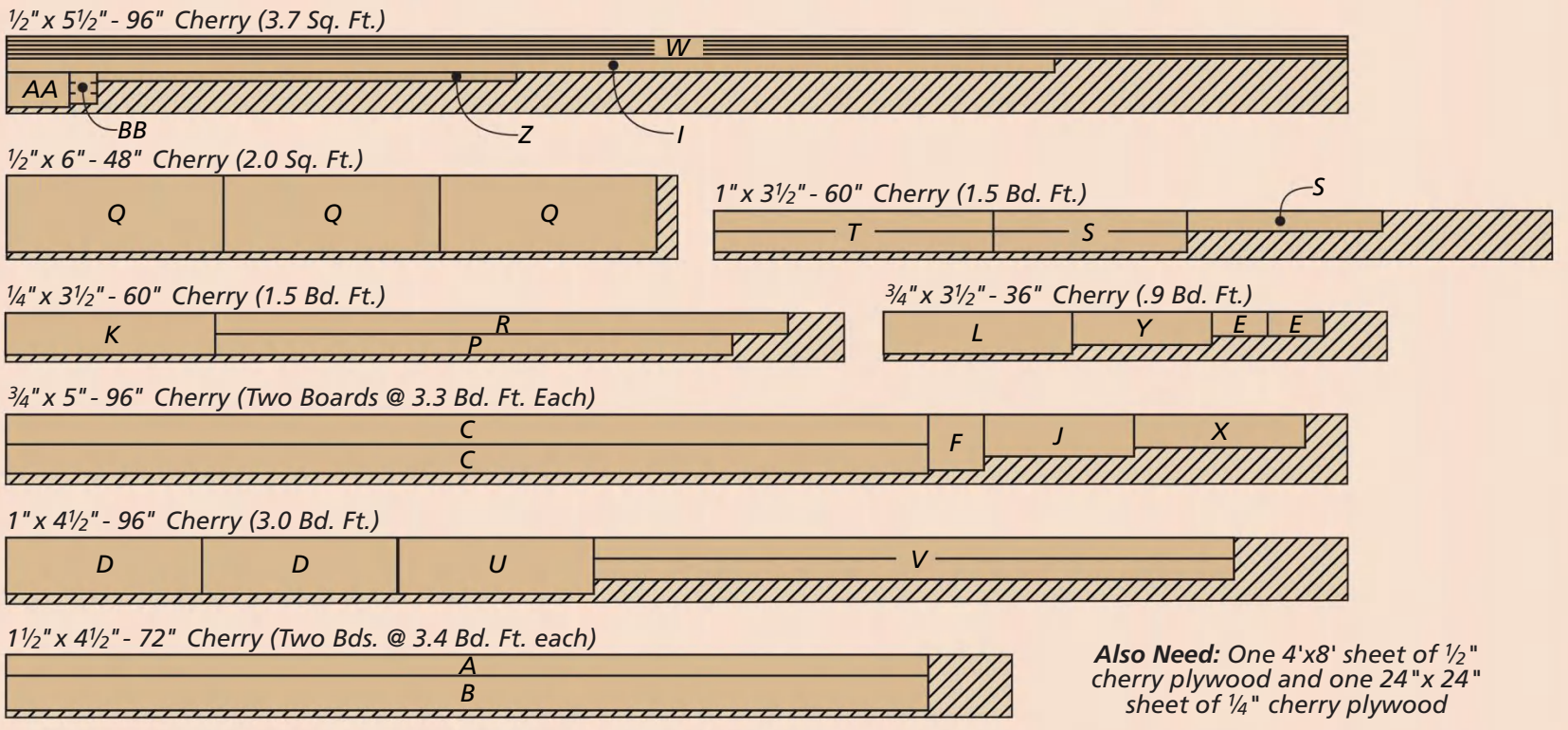

Also Need: *One 4'x8' sheet of ½" cherry plywood and one 24"x 24" sheet of ¼" cherry plywood*

Illustrations: Dirk Ver Steeg

Build a tall CASE

Building this clock starts by creating the case. This consists of a pair of side assemblies tied together with a plywood back. You can see this form in the main drawing to the right.

LONG CORNER POSTS. The side assemblies consist of a pair of posts that capture a frame. The posts are the place to start. Each side will have a front and a back post that are mirror images, so label them to keep them straight.

After planing stock to thickness, rip the posts to width. Take a look at the main drawing and detail 'c' below and note that the front and back posts are different widths. At the router table, rout a groove down the length of the inside face of all four posts. These will hold a tongue on the frame pieces in a little bit.

STOP THE GROOVES. At this point, you can rout some stopped grooves in each post. The back posts each get a pair of short stopped grooves that are routed towards the top and bottom for the back rails.

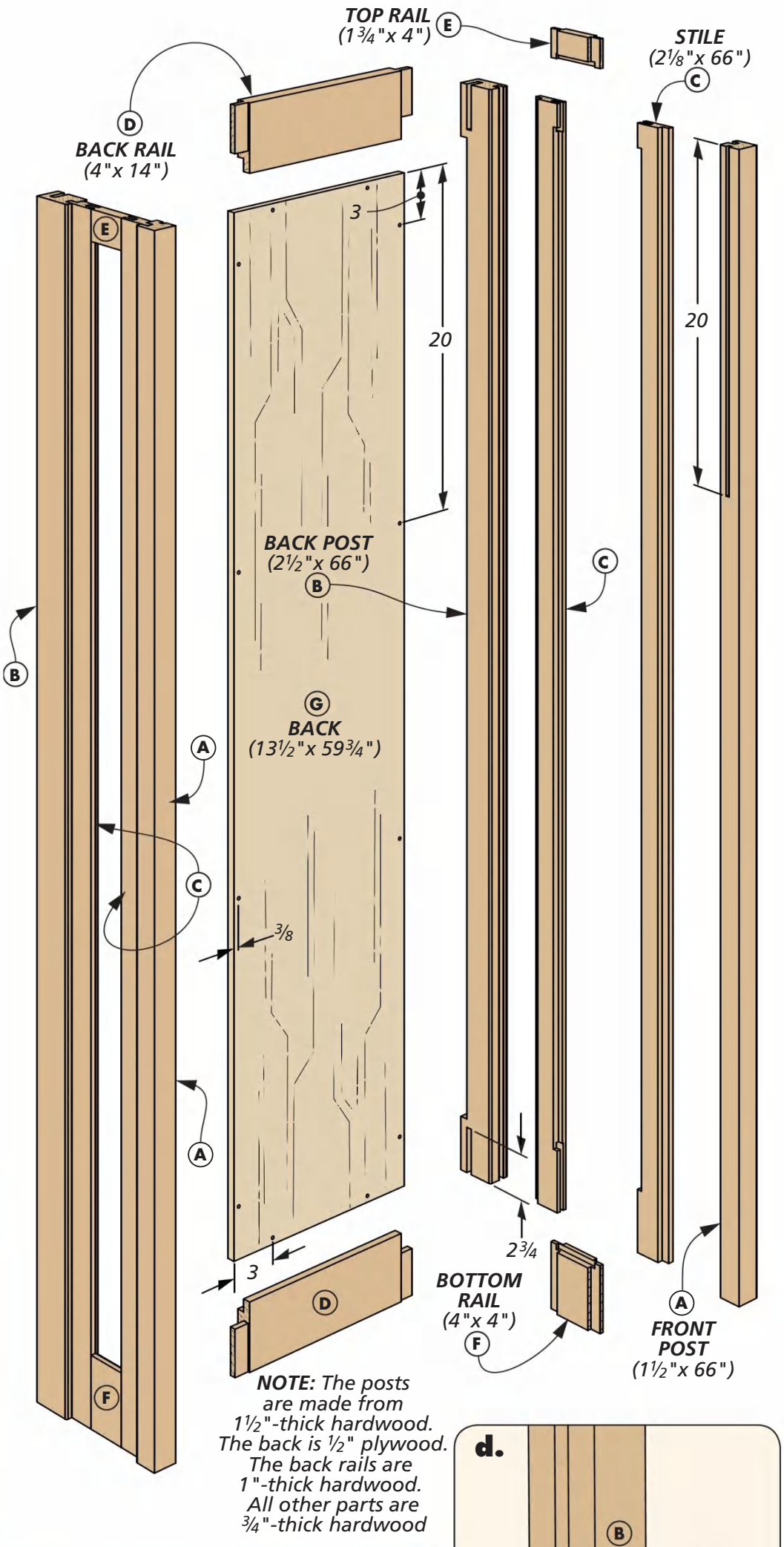

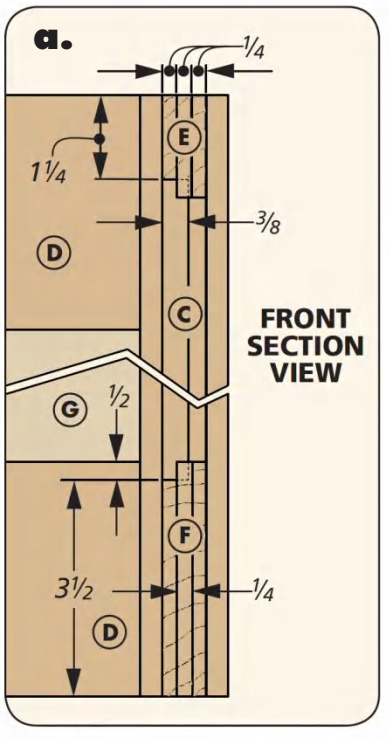

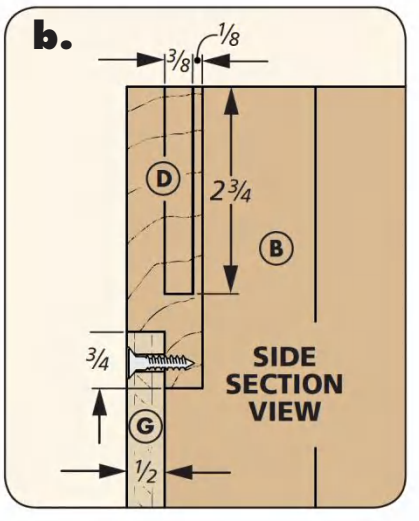

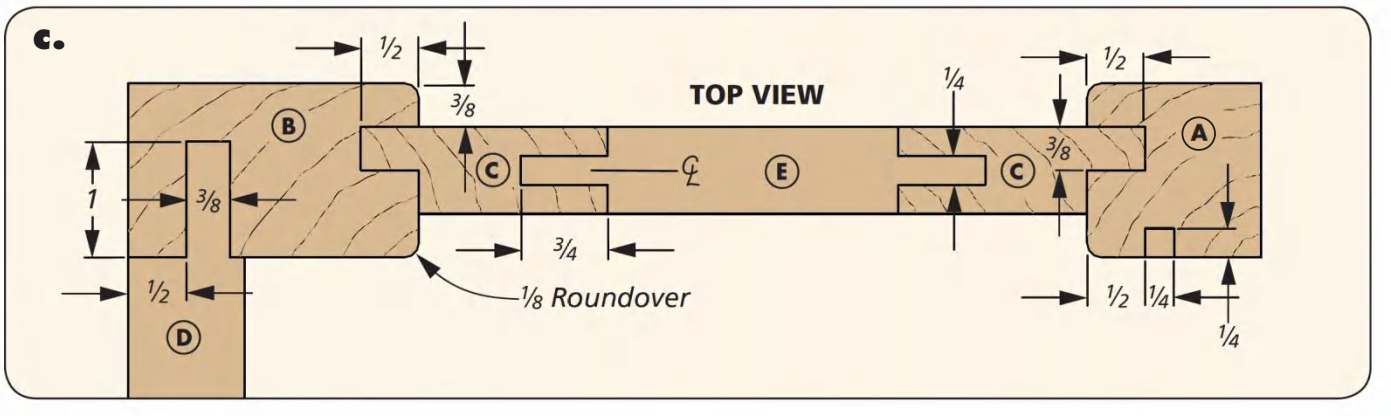

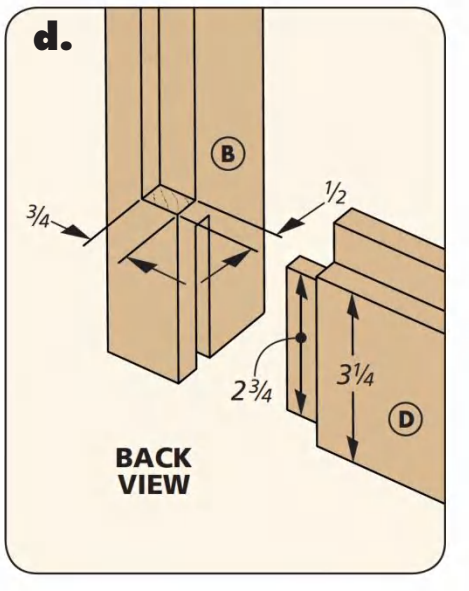

The front posts get a stopped groove that's longer — they're for the clock face. Mark the front and rear edge of the router bit on your fence as a guide. Square up the ends of all of the grooves with a chisel before setting the posts aside.

FRAMES. Now it's time to cut the frame parts. There are stiles, top and bottom rails, and back rails. The stiles are the same length as the post and attach to the posts with a tongue that will be cut after assembly. After cutting them to length, rout a stopped groove on the inside face, along the top and the bottom (Figure 1). Set the stiles aside while you cut the back, top, and bottom rails. Then, cut a tenon on each end, as seen in Figure 2.

ASSEMBLY. At this point, you can do a little assembly. First glue the rails to the stiles. After assembling the side frames, use a dado blade to cut a tongue on the stiles (Figure 3). Finally, use a rabbeting bit at the router table to rout a rabbet along the inside of each frame and square up the corners with a chisel. With the rabbet cut, you can glue the frames to the front and back posts.

Next, you'll want to join the two side assemblies with the top and bottom back rails by gluing them in place. You'll probably find it helpful to add a front spacer to keep the assembly strong before adding the top and bottom. You can cut a plywood spacer and add it in the top groove on the front posts.

Now, flip the assembly face down and use the rabbeting bit in a hand-held router to cut a rabbet along the outside face of the back (again, square it up with a chisel). Finally, you can take a measurement and cut a plywood back panel to fit in the rabbeted opening. The panel is screwed in place.

CREATING THE CASE JOINERY

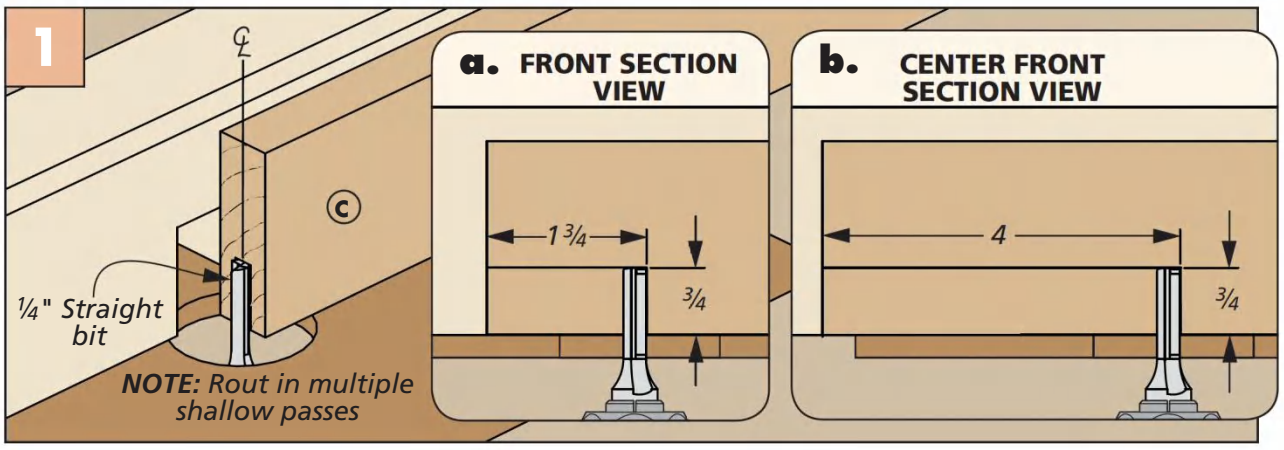

Stopped Grooves. Load a straight bit in the router table. Mark the front edge of the bit as a reference before routing the stopped grooves in the front and back posts.

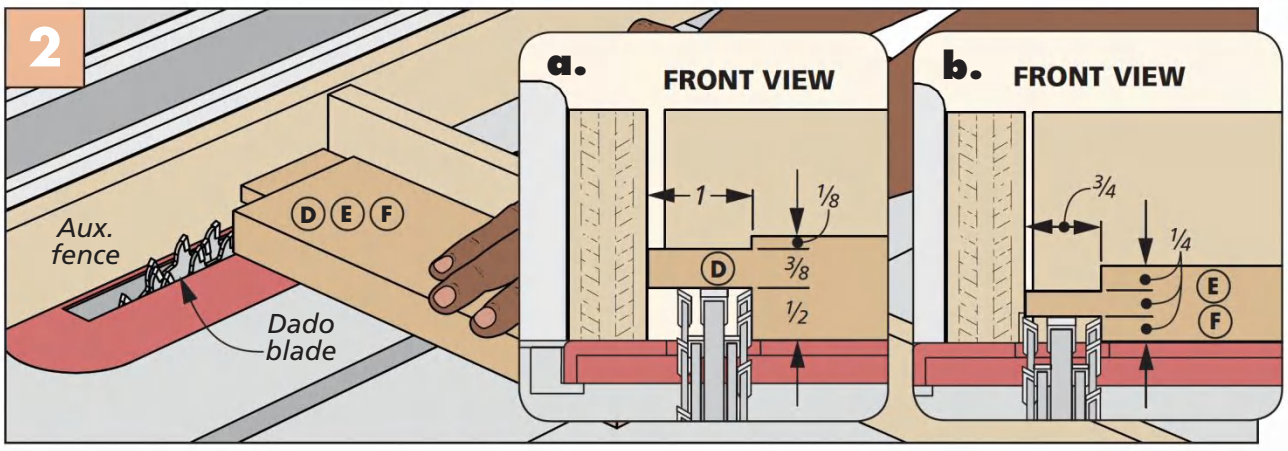

Tenons. Bury a dado blade in an auxiliary fence. Cut the offset tenon on the back rails before adjusting the blade height to cut the tenons on the top and bottom rail.

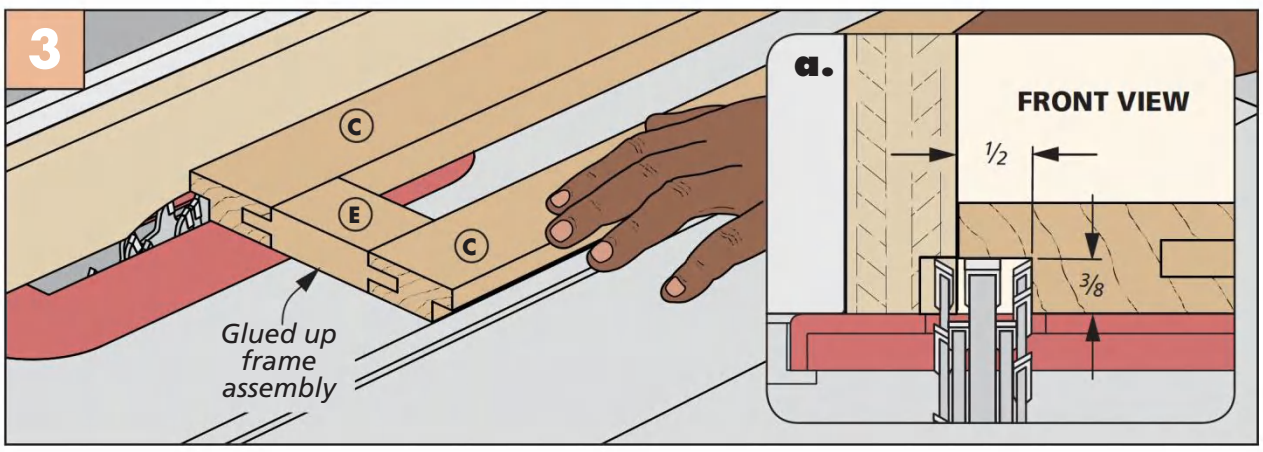

Frame Tongues. After gluing up the frame, cut a rabbet on both outside stiles. These rabbets form a tongue that fits into the grooves in the front and back posts.

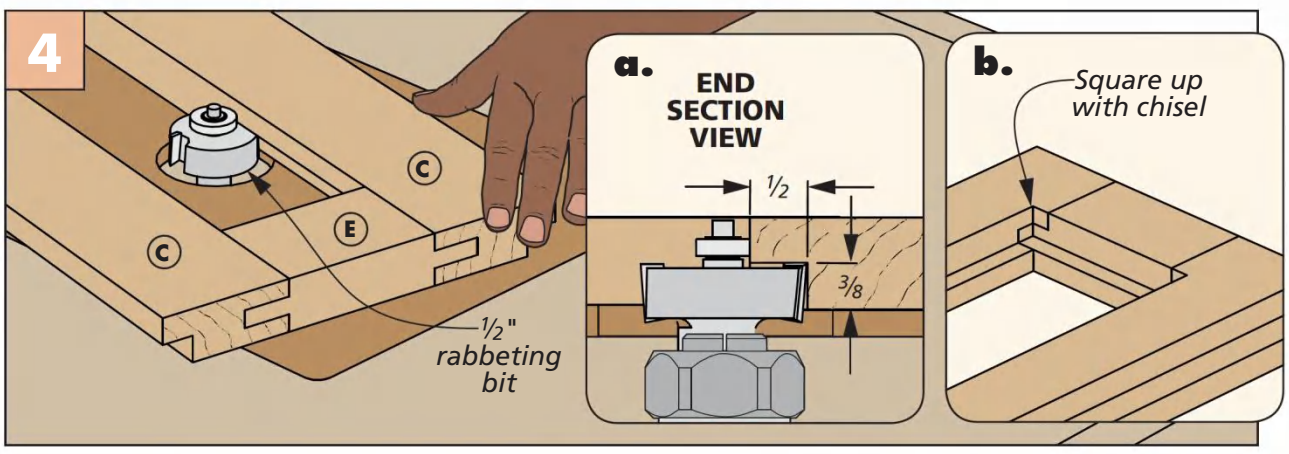

Rabbet the Inside. At the router table, use a rabbeting bit to cut a rabbet on the inside of each side frame. Use a chisel to square up the inside corners.

BASE, TOP & FACE

With the casework done, it's time to add a few other elements to the clock. The first is the base, followed by the face and the top.

HOLLOW PLATFORM. As you look at the drawing to the right, you'll notice that the base is a hollow platform. A plywood cap is edged with trim and then screwed to the case. Below it, a four-sided box with a bottom is glued in place.

Making the plywood cap with edging is up first. Just a note here: the bottom and the top cap (added later) are identical, so make two. Cut the plywood panel to size at the table saw. Then, bury a dado blade in an auxiliary fence and cut the tongue on three sides of the panel.

EDGING. Create the hardwood edging by cutting a groove in the edge of some hardwood stock. At the router table, add a small roundover to the top and bottom edge. Now, cut the edging to length. I start by cutting the miters first and leaving the side pieces long. After all the edging is fit, you can mark the final length of the side trim and cut it. Attach it to the plywood panel with glue.

Once the glue is dry, you can attach the cap onto the bottom of the clock case. Do this with glue and screws. Double check that the case stays square as you're attaching it. Don't attach the top cap just yet. You'll do that in a little bit.

BOTTOM RISER. Now you can create the bottom riser. This is a four sided box that's mitered up front and has a butt joint at the back. You can see the details in the drawings above. Glue the miters together and slide the plywood bottom into the groove. Then, glue the back in place before gluing the box onto the bottom cap.

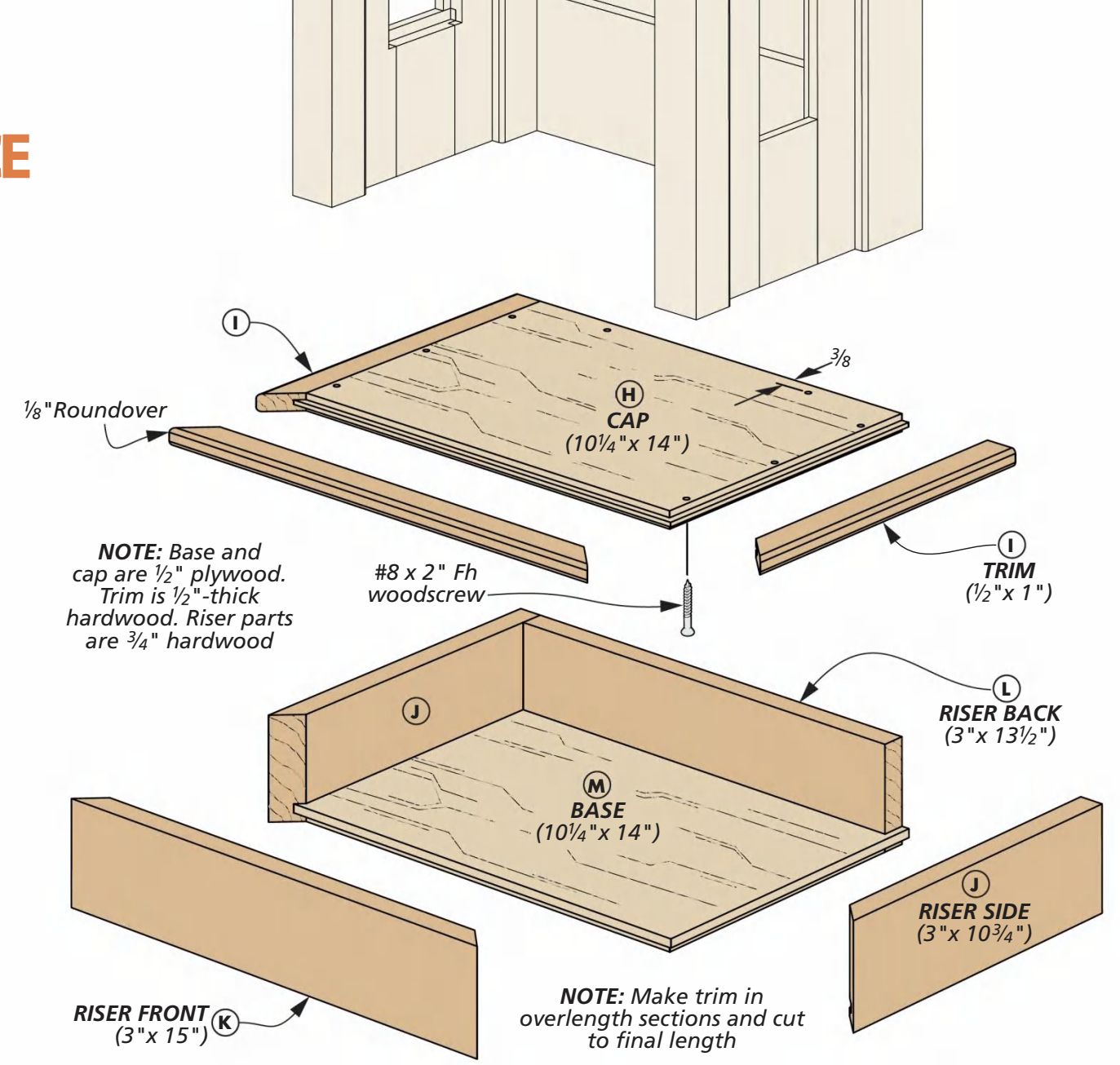

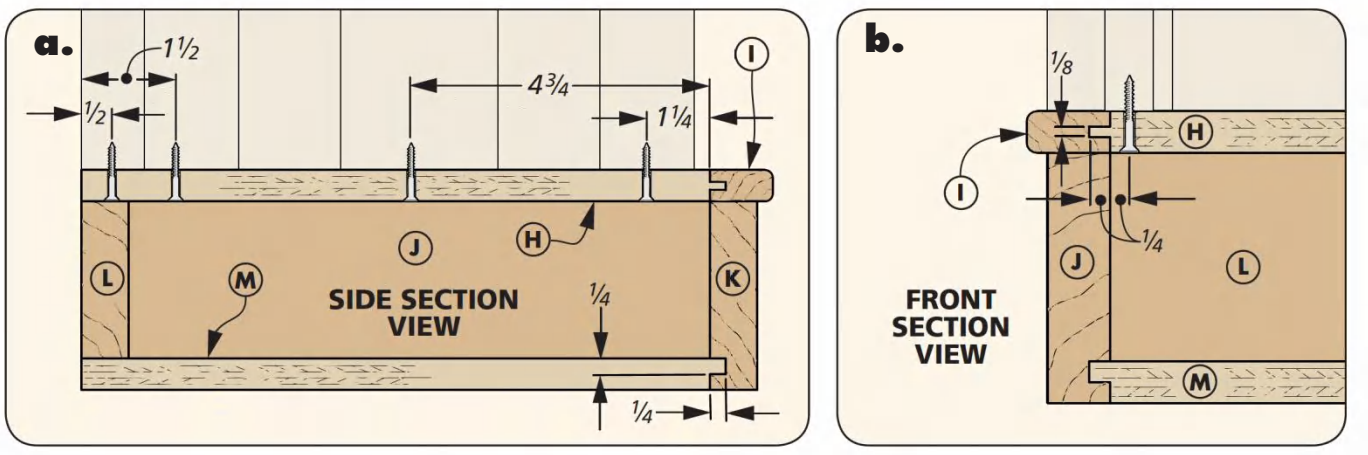

BUILDING A PLATFORM

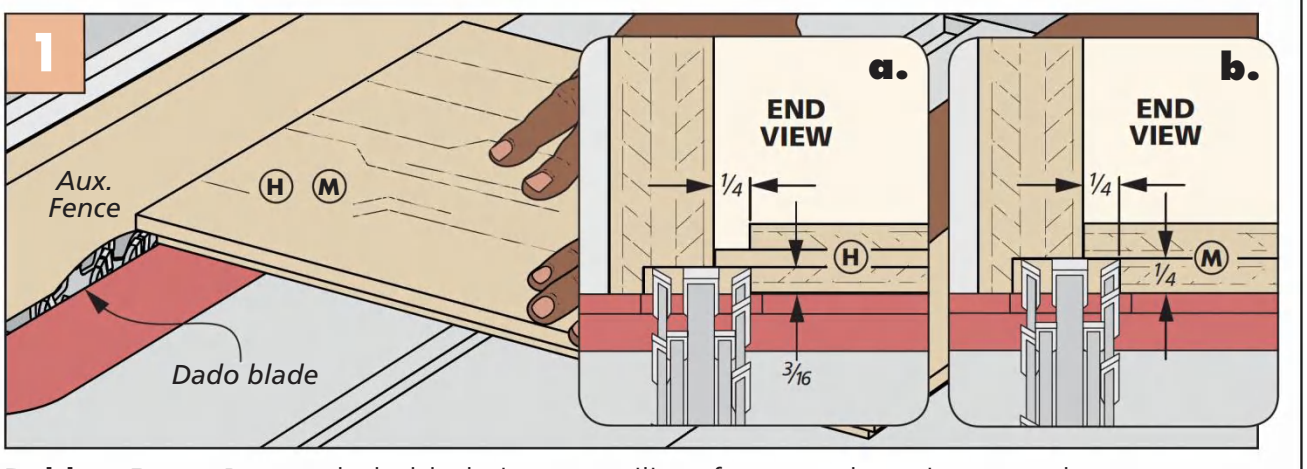

Rabbet Base. Bury a dado blade in an auxiliary fence and use it to cut the tongue on the cap panels and the tongue on the base panel.

FACE & TOP

Adding the face panel and top really start to bring this clock together. The top is made from three distinct layers that are all edged in trim.

FACE FIRST. Before tackling any parts of the top, you have to get the face panel installed. This is simply a piece of plywood that's cut to size. Drill a centered hole for the movement stem and cut out an opening for the bell. Slide it into the grooves in the front posts.

CAP IT OFF. Now is the time to attach the second cap you made, this time on top of the clock. Again, attach it with screws into the posts and frames.

The next few layers of plywood and edging are to create a cap (like the capital on a column). The first layer above the cap is a piece of plywood that has some wider edging. The plywood panel has a rabbet cut around three edges to create a tongue. Then, the edging gets grooved to fit over the tongue. Again, the front edges are mitered for a seamless fit. Glue the edging on and glue it to the cap.

ANOTHER LAYER. Now that you've added two layers onto the top of the clock, what's another layer? To make this final layer beefier however, I glued up three layers of plywood.

To simplify the glue up, start by cutting a piece of plywood to size. Then, glue a slightly oversize second layer on. Here, you can speed things up a little bit by relying on some pin nails to hold the parts together while you continue to work. Use a flush-trim bit in the router table to trim it to size. Repeat this step for the final layer.

With the three layers glued up, you can trim it out with hardwood edging. Finally, complete the assembly by gluing it to the top.

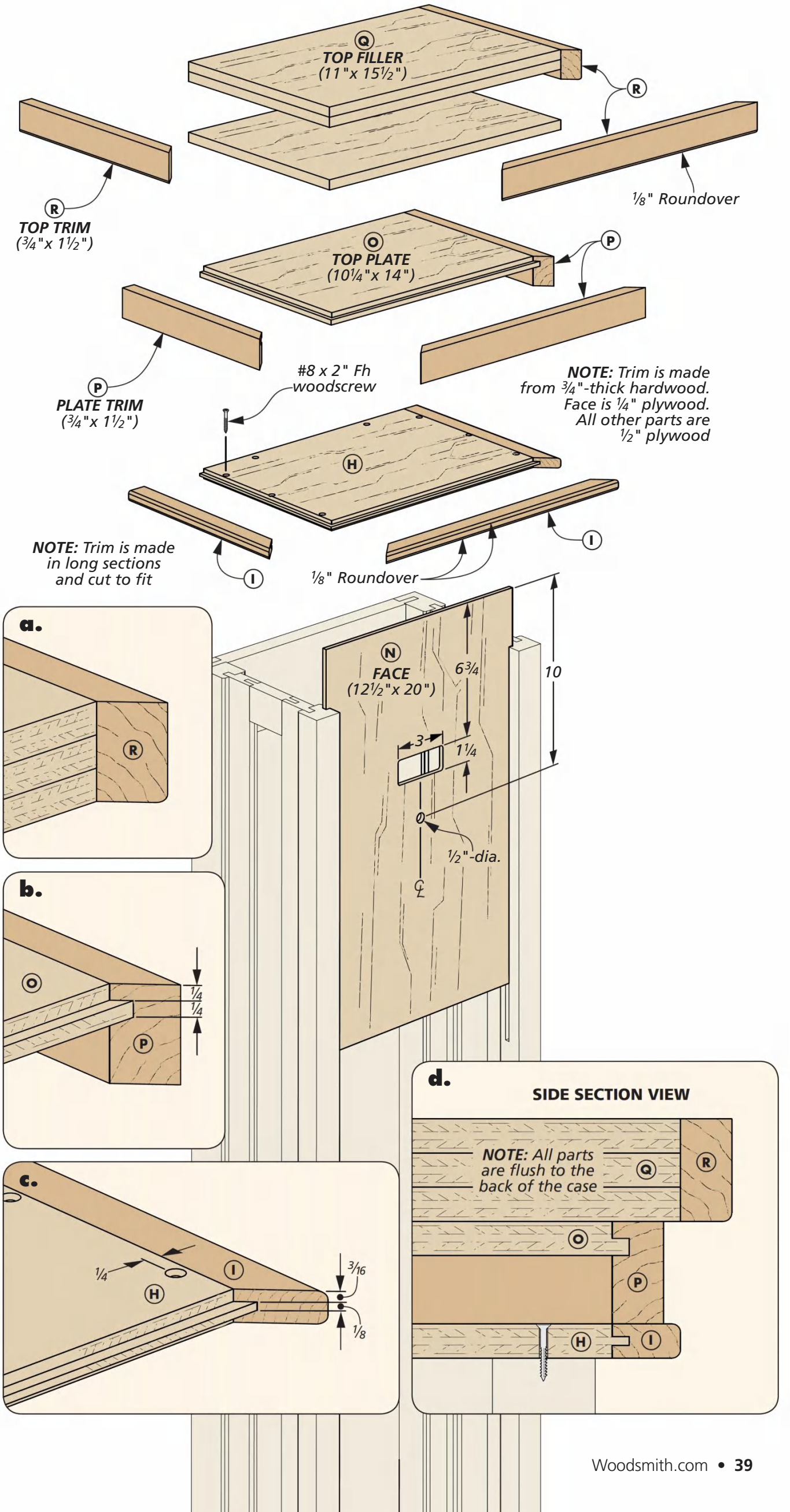

The DOORS & GUTS

The home stretch of this clock build is, in my opinion, the most fun. The final things to add are the two doors (one for the face and one for the pendulum) and to create the face. I started with the doors.

DOOR FRAMES. Creating the door frames is a great exercise in mortise and tenon joinery. You can cut them how you'd like, but my go-to is always the same. Which is to use a mortising machine to make the mortises and a table saw to cut the tenons. If you don't have a mortising machine, a drill press and chisel will work as well, it will just take a little more time.

Cutting the tenons at the table saw can easily be done with a dado blade buried in an auxiliary fence. Make sure to make a couple of test cuts first to dial in the fit of the tenon in the mortise. After everything's fitting, glue together the top and bottom door.

FRAMEWORK & DOORS. To tie in with the Prairie style, I chose to make a framework to go in front of the glass. You can see how it's made on *Woodsmith.com/252*. For now, use a router and rabbeting bit to create a rabbet on the back of the doors for the glass and square up the corners with a chisel.

At this point, you can mount the doors. If your hinges require a mortise like mine do, create a small template out of hardboard and use a dado clean-out bit in a palm router to cut it. Then as the final step, you can install the glass in the entire clock. All of the glass is held in with retainer strips that are nailed in place.

Plans for building the door framework along with plans for the clockface are at: **Woodsmith.com/252**

GLASS STOP (5/16"x 5/16") W
2 9/16
15 9/16
1/2"-dia. Rare-earth magnet
Side glass
W
S
DOOR RAIL (1 1/2"x 14")
T
Top Door Glass
T
DOOR STILE (1 1/2"x 20")
S
Hinge
Bottom door glass
NOTE: Measure and have glass and stops cut to a snug fit after assembling case and doors
41 3/8
23 1/8
5 1/16
W
S
V
DOOR STILE (1 1/2"x 45 13/16")
V
℄
℄
LOWER DOOR RAIL (4"x 14") U
NOTE: Door parts are made from 1"-thick hardwood. Stops are 5/16"-thick harwood
Optional grid
2 1/2

a.
5/16
5/16
V
U
S
5/16
V
11/16
R
T
SIDE SECTION VIEW

b.
1
T
1/2
1/2
R
1/2

c.
3/4
2
Mortises are 3/32"-deep for sourced hinge

d.
℄
Wood knob

e.
2 1/2
1/16
SIDE SECTION VIEW

CLOCK PARTS

The final details to put together are the clock parts. These are the movement, support shelf, clock face, and pendulum shaft. You can start with the shelf.

MOVEMENT. The movement sits on a support shelf. It's just a couple of vertical support brackets cut to shape at the band saw (detail 'a'). They have a dado in them to hold a shelf. The shelf has an opening for the pendulum that is cut by drilling the ends and then cut out the waste. The shelf is screwed to the face panel (see detail 'c').

After placing the clock face (details for making it are at *Woodsmith.com/252*), you can install the movement. Wrap it up with a couple of hands and attach the weights.

PENDULUM ARM. The final detail to take care of is the pendulum arm. The arm is a piece of cherry that's routed into a "football" profile (Figure 1 below). Once that's done, epoxy a threaded rod in a hole on the bottom of the arm (drawing below).

The brackets for the pendulum bob are cut to size and glued on a cherry bob with a brass face. The details to create these can be found in the drawing and details 'a' and 'b' below.

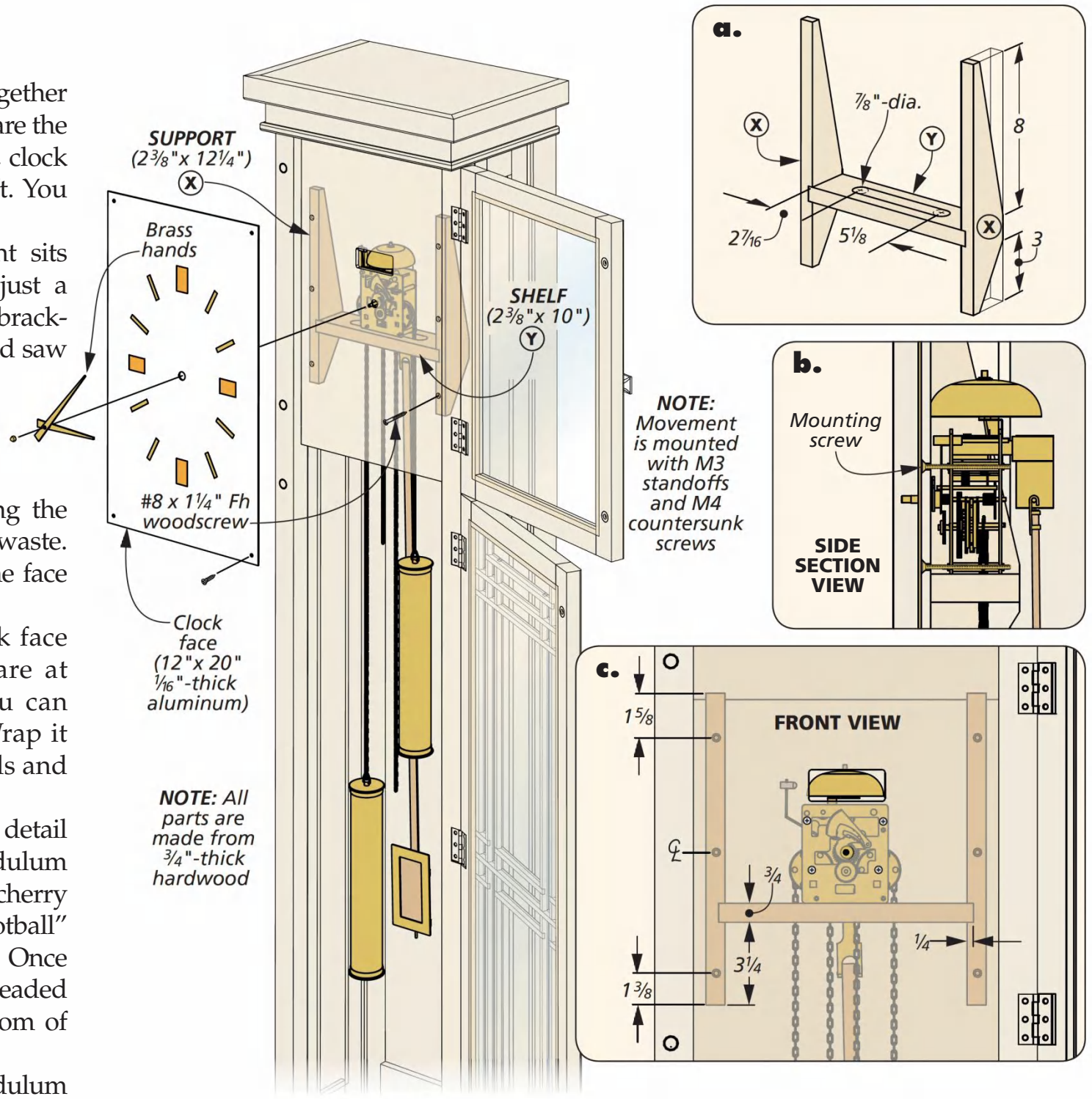

Once the pendulum is hung on the holder, you can apply a few winds to the movement. Once it's swinging, the clock is ready to find its way into your home. And I must say (and I'm hoping my wife agrees), that it's a great-looking modern clock that's a departure from traditional grandfather clock styles. W

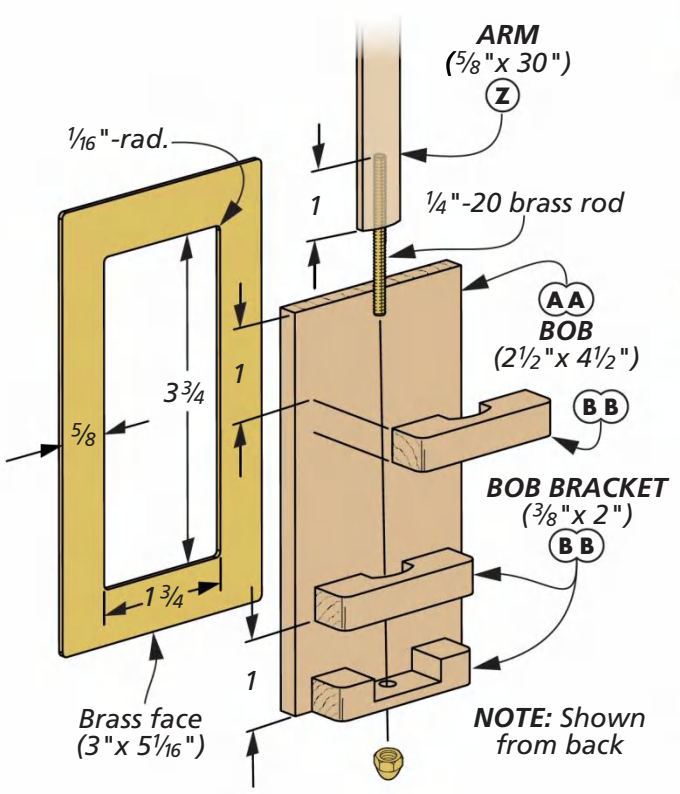

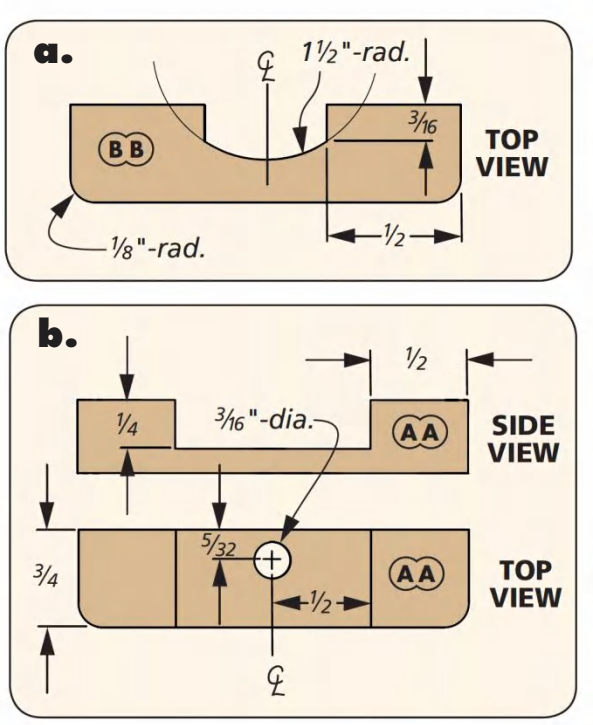

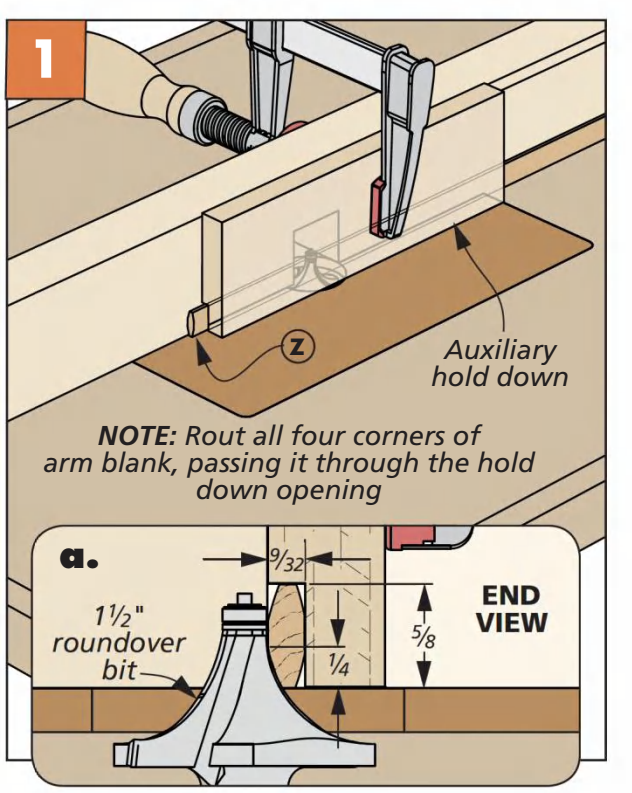

Written & Illustrated by: Erich Lage

Craftsman Nightstand

The Craftsman family continues to grow with the birth of the solid piece you see here. Surely the term "the more the merrier" applies to expanding this clan.

▲ The faux tenons serve the dual purpose of hiding the screws that hold the case together, while giving the project some classic craftsman credibility.

▲ The classic pattern that is created by using half-blind dovetails for the drawer joinery is highlighted by the contrasting use of maple and oak hardwoods.

If a feeling of *deja vu* rolls over you while pondering this attractive nightstand, it's okay, there's a reason for that. Awhile back *(Woodsmith 219* and *235)* we built a gentleman's dresser and bed that are the older kin to this handsome piece of furniture. It has a lot of the same winning features that come from its older siblings.

There's the solid-wood construction for the whole project (well, a plywood bottom for the drawer is the one exception). And the joinery you'll employ here follows the same path as its larger predecessor.

There's stub tenon and groove joinery that brings together the sides and back of the case for the nightstand. This simple but stout joinery is quickly done at the table saw and makes frame and panel construction the most logical choice. As you see in the main photo, the wide stiles and wider rails provide the luxury of lightly gluing the hardwood panels in place. This allows for wood movement while not compromising the strength of the unit.

The bottom and drawer divider use the same joinery along with some cleverly hidden screws that reinforce the case. You can't see them here because they're hidden under the faux tenons in the sides and the top.

There's nothing faux about the dovetails that are used for the drawer construction. Or the Craftsman-style pulls that operate it. The adjustable shelf under the drawer provides the option of storing current reading material, and maybe an extra blanket that would be handy to have close at hand. Convinced? I hope so, it's time to head to the shop.

Project Design: John Doyle

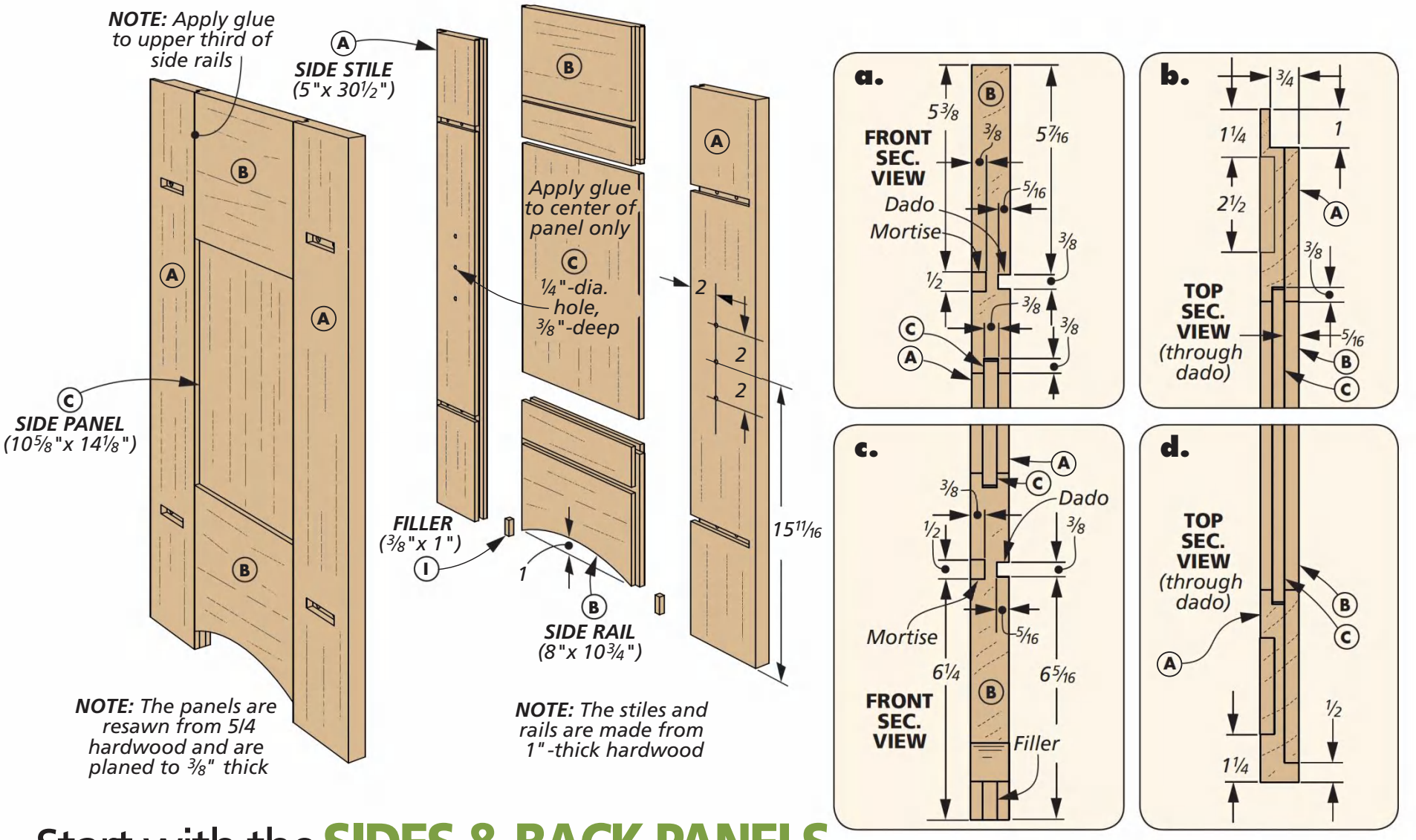

Start with the SIDES & BACK PANELS

The first order of business is making the frame and panel assemblies for the sides. The table saw, router, router table, and planer are the tools you'll need for this process.

SIZE THE PARTS. There's some preparation to do for the sides and the back. It starts with gluing up the boards needed for the rails. Also, as you see in the main drawing above, you'll need to resaw and plane the material to thickness for the panels. When gluing up the panels, make sure the pieces stay flat. With the clamps out of the way, cut all the parts to size. Now you can set the panels aside to focus on the stiles and rails.

GROOVES. Cutting the centered groove in the stiles is an easy task when you follow the steps you see in the box below. Make the first pass with a ¼" dado blade close to the center of the board (Figure 1). Then flip the board end for end and make a second pass. With ruler in hand, check the width of the groove and adjust the fence accordingly to make the ⅜" groove you're looking for (detail 'a').

The back stiles need a little more attention. Detail 'b' above shows the rabbet that the back assembly will be glued into later on. Change the dado set to make this rabbet. Do this cut with the dado blade buried in an auxiliary fence, and the stile standing on edge. This setup gets you close to ready for the next step.

TONGUES. To make the tongues on the ends of the rails, adjust the fence distance and dado blade height to match what you see in Figure 2a. That completes the work on the top rails.

There's one more detail for the bottom rails — making the arc. In the main drawing above, you

JOINERY DETAILS

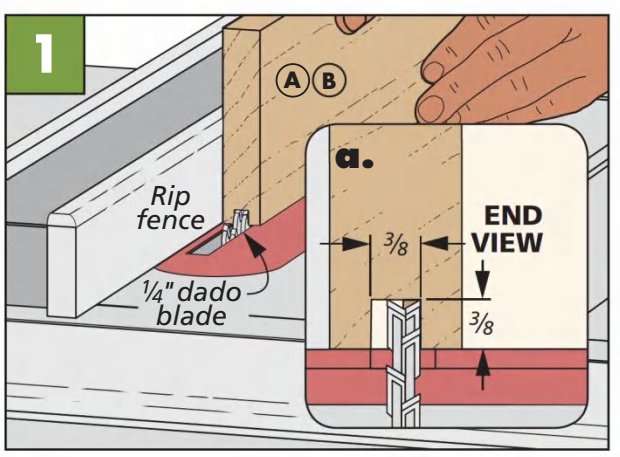

Grooves First. A centered groove is a two-step process. Flip the board end for end after making the first pass.

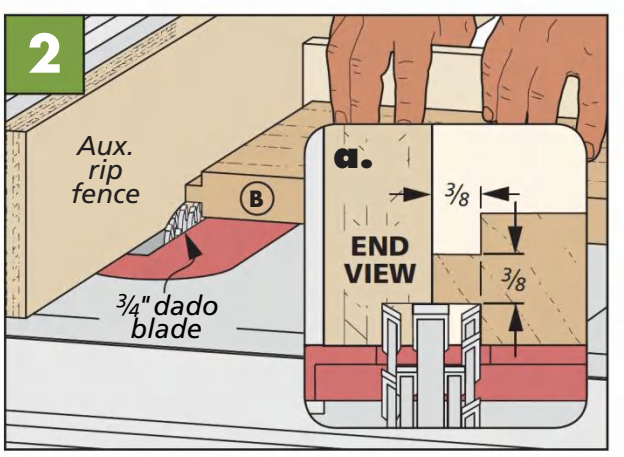

Tongues Second. The mating tongue requires a dado blade buried in an auxiliary fence attached to your rip fence.

see this arc. It's just a matter of drawing the profile and cutting it out at the band saw.

GLUE UP SIDES. All this hardwood has to be able to move. With that in mind, use your glue strategically. Apply glue on the upper third of the rails. And just the center of the panels.

STOPPED DADOES. The stopped dadoes you see in the drawings on the previous page hold the bottom panel and the drawer divider in place. It's best to do the dadoes at the router table. Back at the bench, square the stopped ends with a chisel.

MORTISES. As I mentioned earlier, the tenons are faux, but you'll need real mortises to house them. The box below shows how to make the mortises in the stiles. The jig that's being used there is available online at *Woodsmith.com/252*. Later, you'll use the jig for the mortises in the top of the nightstand.

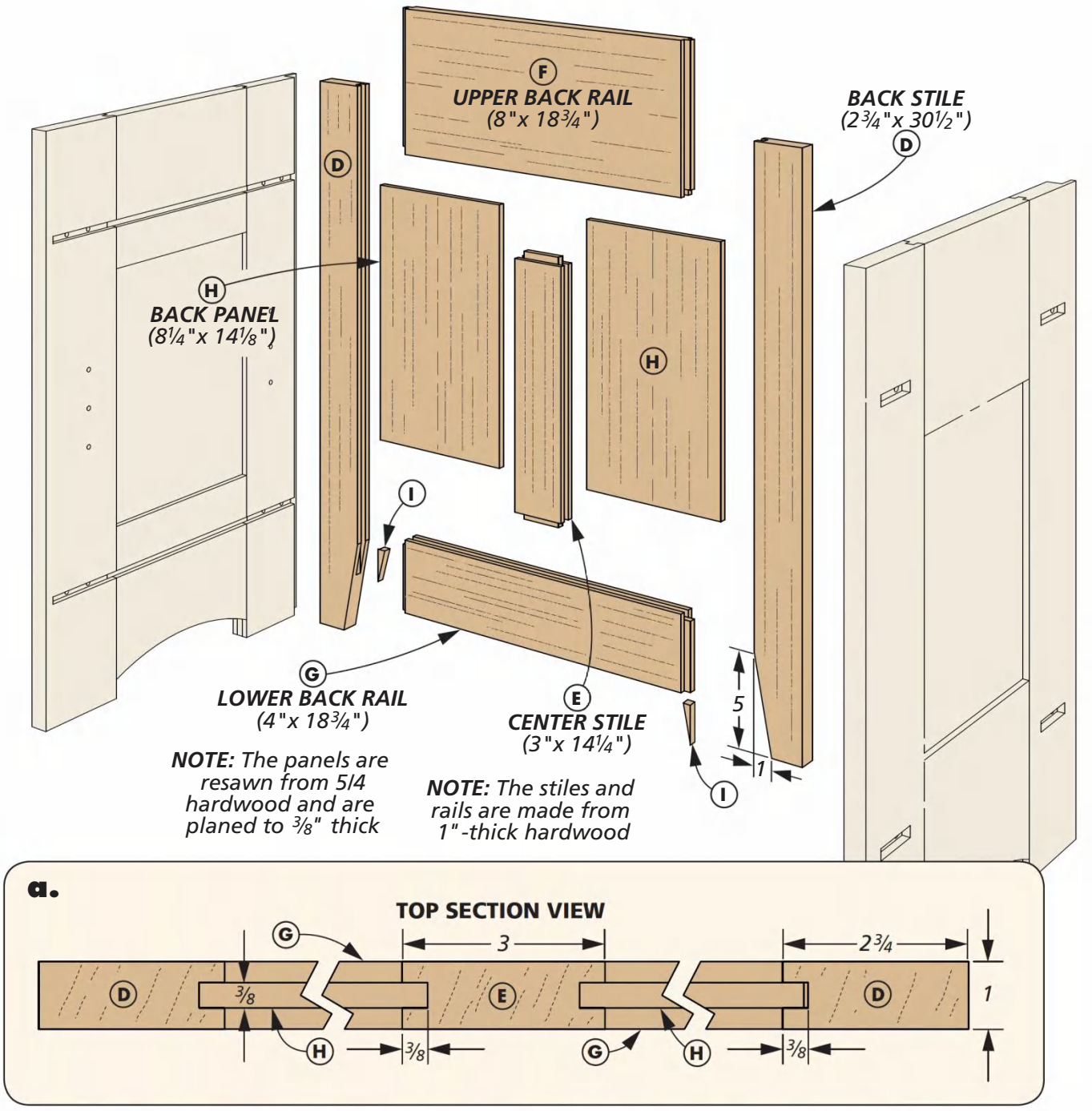

THE BACK

The back panel is more of the same, except here, you have a center stile thrown into the mix. The main drawing above shows this, along with the extra panel.

It might seem odd that the center stile is wider than the outer stiles. This is because the back stiles sit in a rabbet cut in the sides. The shoulder of the rabbet adds to the width of the stile.

TAPERS. Speaking of the outer stiles, as you see above, they're tapered at the bottom. Some quick work at the band saw and a little time with a sanding block at the bench will have the stiles ready for glue up.

GLUE UP. Make sure the center stile is properly in place before you commit the clamps. The wide top rail makes it easy to keep the back panel square during glue up. The same gluing strategy applies here as with the sides. Having panels split because they can't move is a heartbreak you don't want.

FILLERS. Completing the back assembly requires adding fillers for the stiles and gluing them in place. Now that you've got some frame and panel experience, the frames for the bottom of the nightstand and drawer support on the next couple of pages will be a breeze.

GO 2 Online Extras

Instructions for the mortising jig can be found on our website: Woodsmith.com/252

MORTISES IN THE SIDES

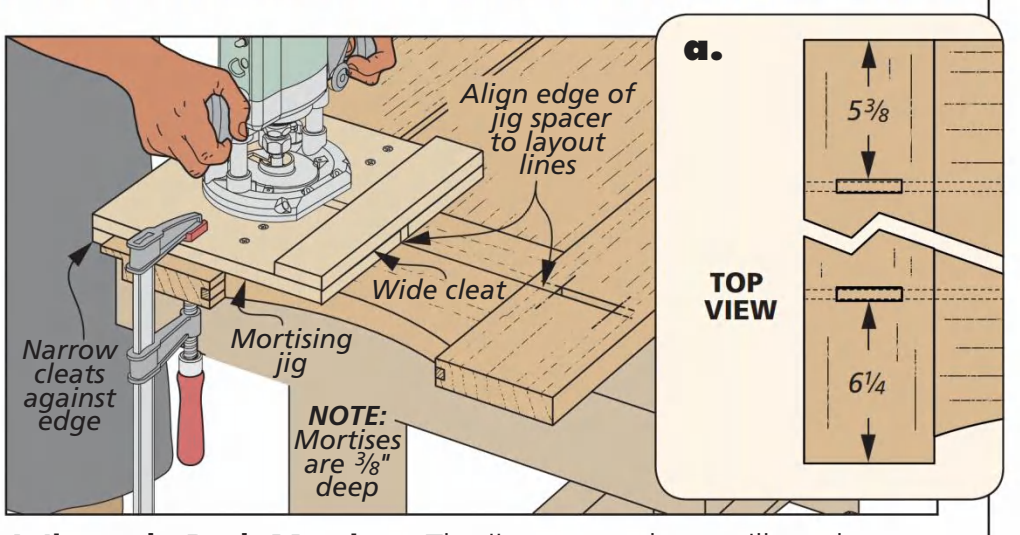

A Jig to do Both Mortises. The jig you see here will work on the sides and top of the nightstand. A dado cleanout bit will do the heavy work. A sharp chisel squares up the corners.

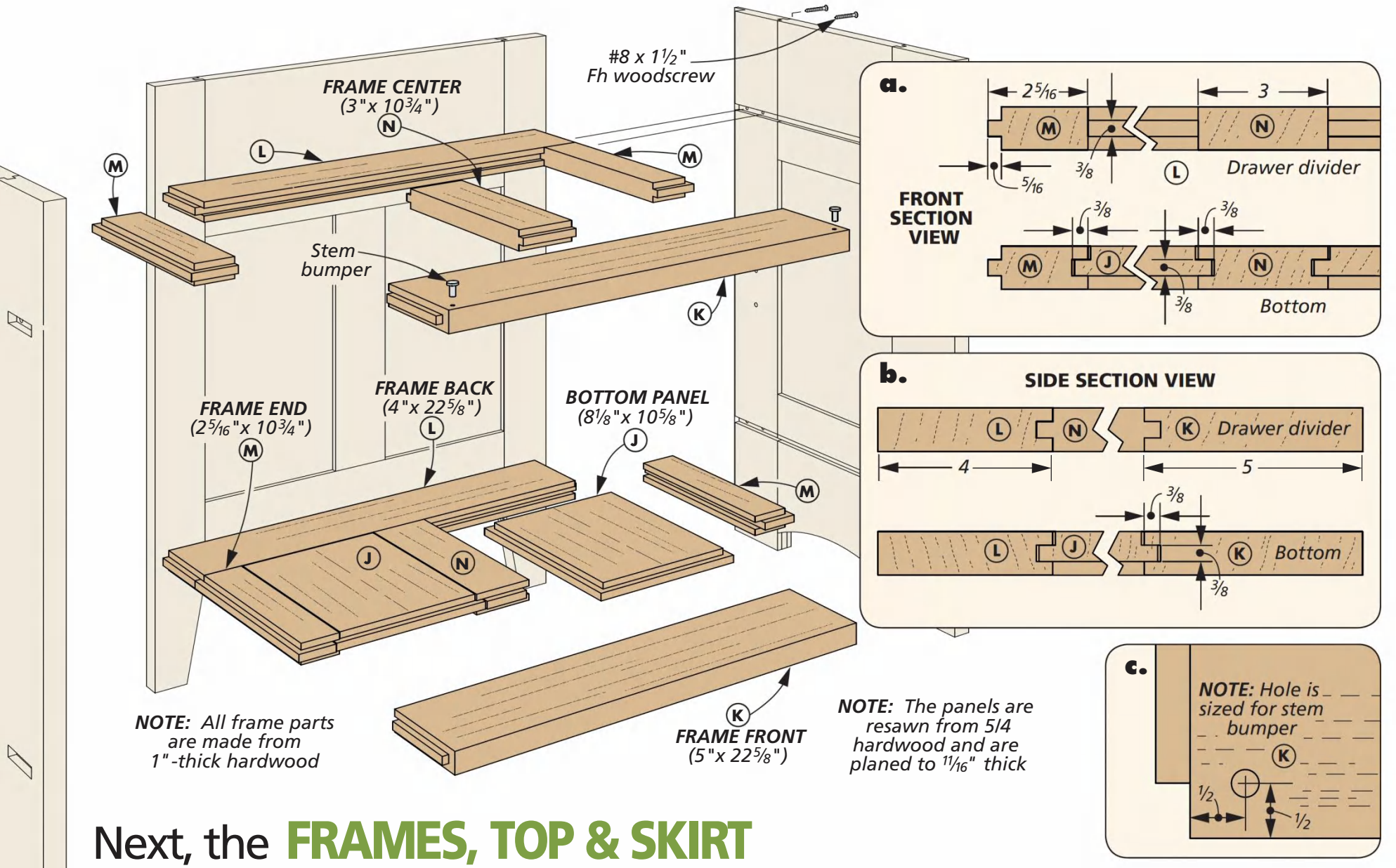

Next, the FRAMES, TOP & SKIRT

It's time for some horizontal pieces, namely the bottom and the drawer divider. Structurally the two web-like frames are identical. Both have wide pieces at the front and back (the front pieces are a little wider). The bottom assembly has hardwood panels that are rabbeted to be flush with the top surface. The small shadow line this creates adds accent to the opening. Both panels have a tongue on the outer edges to join the sides together. So, as before, most of the work is done at the table saw.

PANEL RABBET & DIVIDER SHOULDER

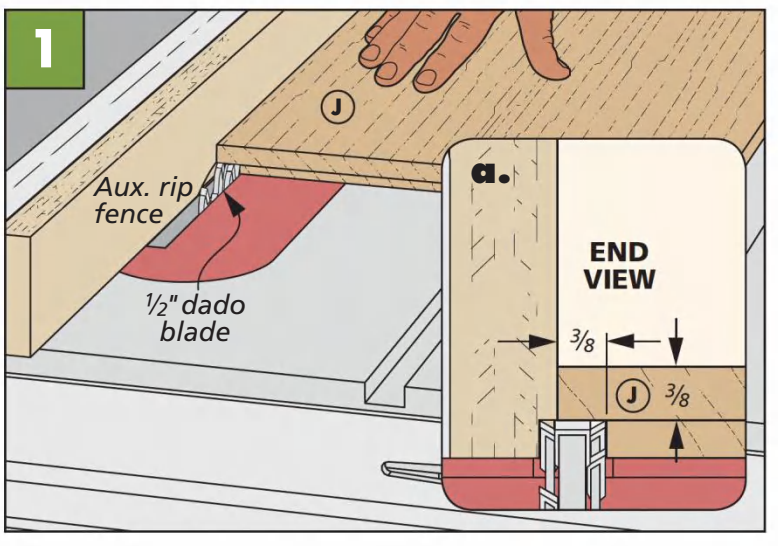

Table Saw. The panels that fit in the bottom frame are rabbeted so they sit flush with the upper surface. Test the fit of the rabbet in one of the frame pieces.

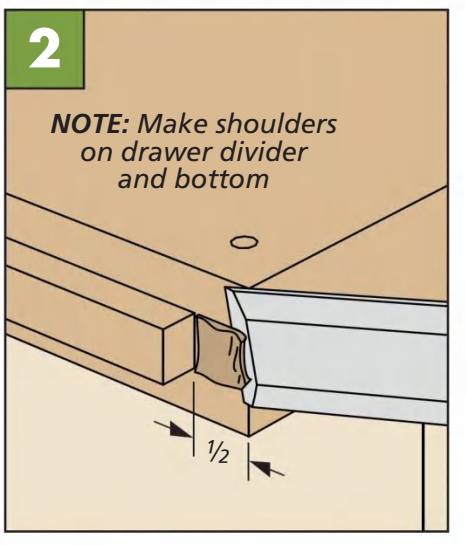

Make A Shoulder. Trim the shoulder with a handsaw. Clean it up with a chisel.

GLUE UP. But first, glue up the two panels for the bottom frame (if you don't have material wide enough). While they're drying, you can work on the fronts, backs, centers, and ends.

SIZE THEM ALL. Since the framework pieces of the bottom and divider are identical, you might as well make them all at the same time. I started with the frame fronts and backs. There are a lot of grooves to make in seven of the ten parts of the two assemblies. So, like you did earlier, find the center position for the fence in one workpiece right out of the gate, then cut the grooves in the remaining parts.

Notice in the main drawing above, and detail 'b,' that the frame ends and center of the drawer divider have no grooves. There's no need for them since there are no panels here.

RABBETS. After trimming the panels to side, cut the rabbets (Figure 1). Leave the table saw set up as is. You'll be back to do

more after the two assemblies are glued up.

FRAME GLUE UP. The center stile is easy to position in the bottom panel. But since its counterpart in the drawer divider isn't held in place, you'll need to mark its location. When the glue is dry and the clamps are stowed, it's back to the table saw.

This time you're making the tongues on the ends of the two panel assemblies. When they're done, use a chisel to make the shoulder for the stopped dado in the sides (Figure 2).

CASE ASSEMBLY. To assemble the nightstand without a hitch, it's best to do a dry run first. This gives you the opportunity to drill some pilot holes for the screws that are hidden in the mortises in the sides. You'll still need some clamps after you've applied the glue, but screwing the sides to the bottom and divider means more clamps can stay on the rack.

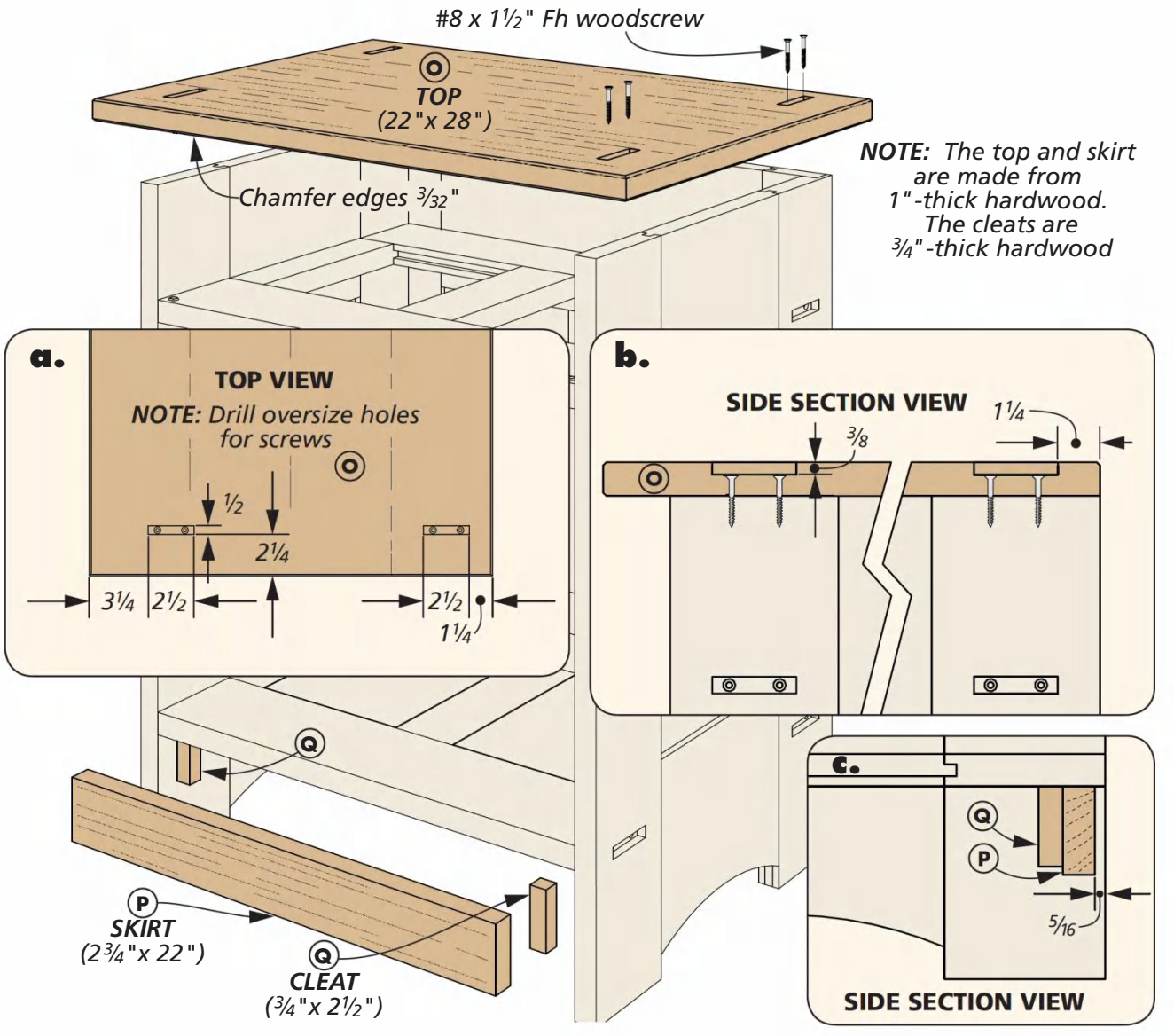

THE TOP & SKIRT

Take some time when matching the boards that you're going to use for the top, it's worth the effort since it's the visually dominate surface of the nightstand. When you're happy with the results, you can glue up the panel. After trimming the panel to final size, chamfer the top and bottom edges.

MORTISES. Making the mortises in the top involves the same jig you used on the sides. But there's an added twist in the process. As you see in detail 'a' above, the mortise location is closer to the back edge than the front. The box below shows how to deal with this problem.

As detail 'b' shows, spacing the mortises this way keeps them aligned to the ones in the sides. To finish, trim the corners square with a chisel. There's one more thing to do before installing the top. That's drilling the countersinks and pilot holes (a little oversized to allow for movement) in the mortises.

INSTALL THE TOP. I aligned the mortises in the top to the sides, and with a proper sized bit, drilled pilot holes into the sides. Wood screws with a little wax on the threads brought the sides and top snuggly together.

THE SKIRT. Size the boards for the skirt and cleats. Detail 'c' shows how they're glued to the bottom. Now, you can move on to the drawer and the final details of the nightstand.

MORTISES IN THE TOP

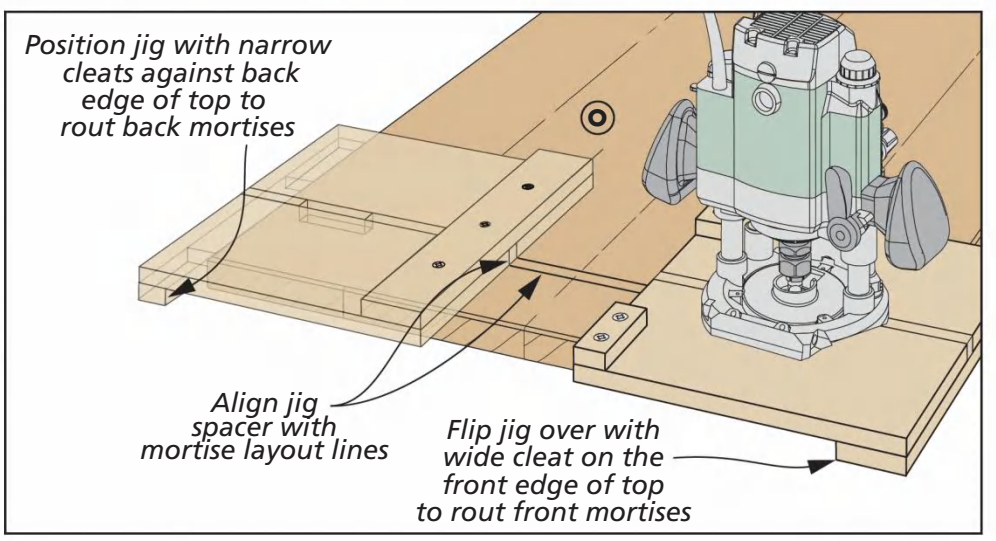

Cleats to the Rescue. The jig you used to make the mortises in the side panel works here also. The narrow cleat is used for the mortises at the back, the wide cleat positions the ones at the front.

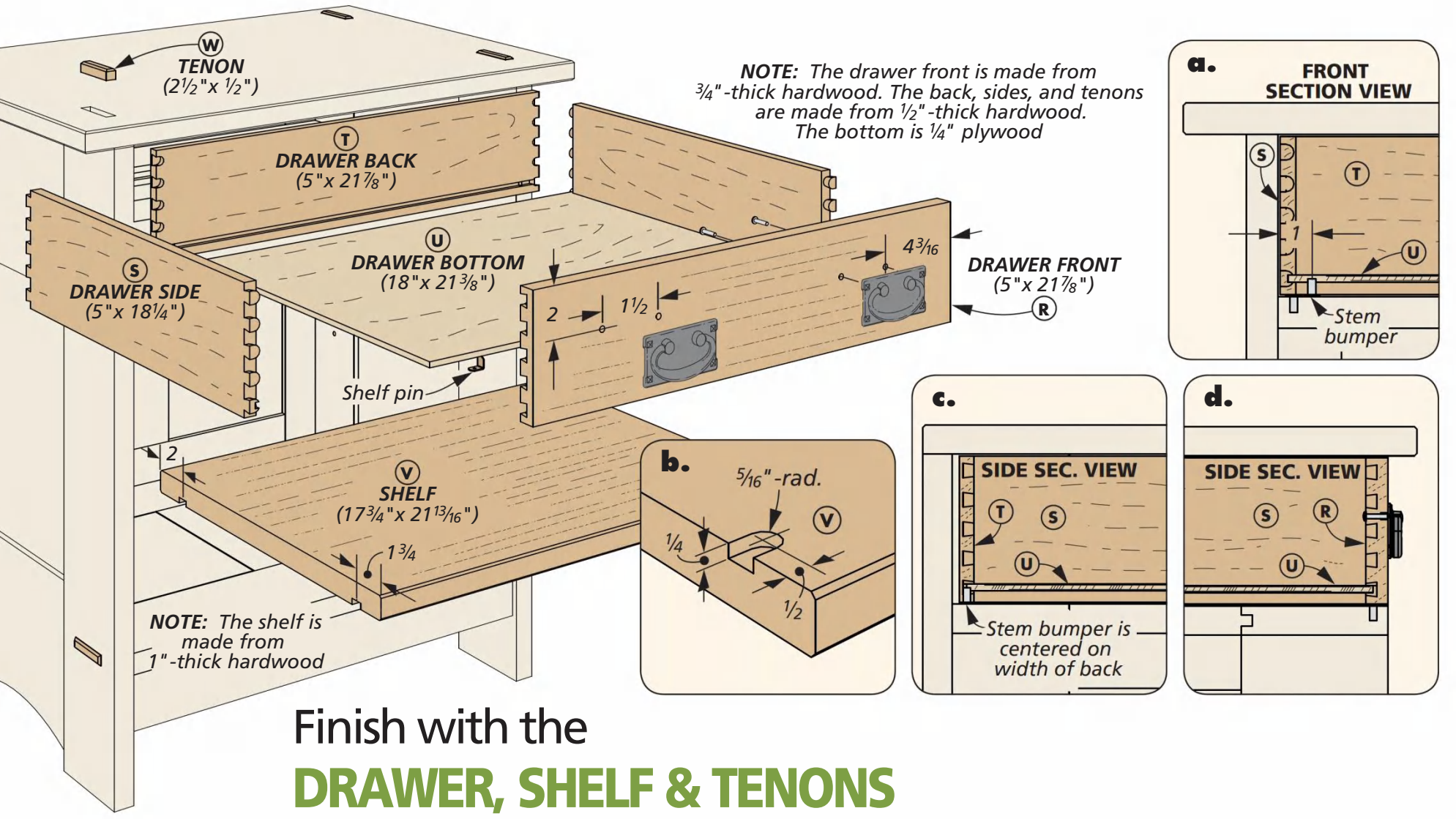

Finish with the DRAWER, SHELF & TENONS

You've got a completed case that's looking good on its own sitting in front of you. There are a few things to do to finish the project; the drawer, adjustable shelf, and the tenon plugs that hide the screws. Those tenons add a nice Craftsman accent to the nightstand as well. Since the drawer requires the most work, let's get that out of the way first.

The drawer, with its white oak front, maple sides and back, and plywood bottom is going to give you a break from the work of stub tenon and groove joinery. As the box below shows, dovetails are on the menu. It would be hard to come up with a stronger joint than the half-blind dovetails used on this drawer. It all starts with sizing the parts.

The details above, and the first drawing in the box to the left, shows the size of the half-blind dovetails that worked well for this drawer. A good jig will make short work of this step.

GROOVE FOR THE BOTTOM. As you've probably noticed, there's no false front on this drawer that would conveniently hide the groove for the drawer bottom. Not to worry, the second drawing in the box to the left shows you how to solve that problem.

DRAWER DETAILS. After the dovetails are done and the drawer is assembled, you need to install the stem bumpers. The drawer doesn't have hardware attaching it to the nightstand. What is does have are stem bumpers that guide it in and out of the opening. Detail 'a' above shows how far in the bumpers set in from the sides. Detail 'c' shows that they are centered on the thickness of the back.

GLUE UP. Keep in mind, it doesn't take much glue on the dovetails. Nonetheless, any squeeze out can be removed with a rag and some warm water.

DOVETAIL DETAILS

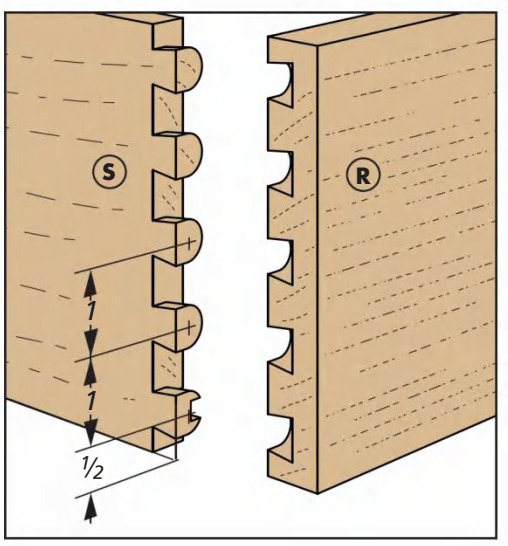

The Layout. Use your dovetail jig to get the optimal layout for the drawer joinery.

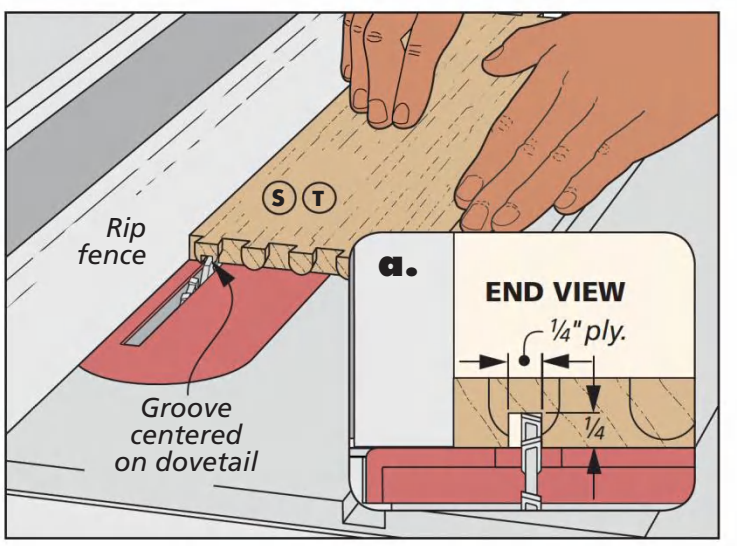

Hiding the Groove. Setting up your table saw this way conceals the groove for the bottom in the tail of the side and the socket of the front.

A hand drill is called into duty for the last work on the drawer. Drill the holes in the back of the drawer for the stem bumper (detail 'c' on previous page). All that's left is to add the drawer pull hardware. Now you can work on the shelf.

THE SHELF

The shelf is a straightforward piece of the project. It's just some boards glued up, cut to size, and chamfered on the front and back edges. Detail 'b' on the previous page shows a notch in the underside for the shelf pins. These will hold the shelf in place

FAUX TENONS. Lastly, the faux tenons require a little caution to make safely. The box above shows the details. The blank needs to be long enough to safely make 12 tenons.

TENONS ON DEMAND

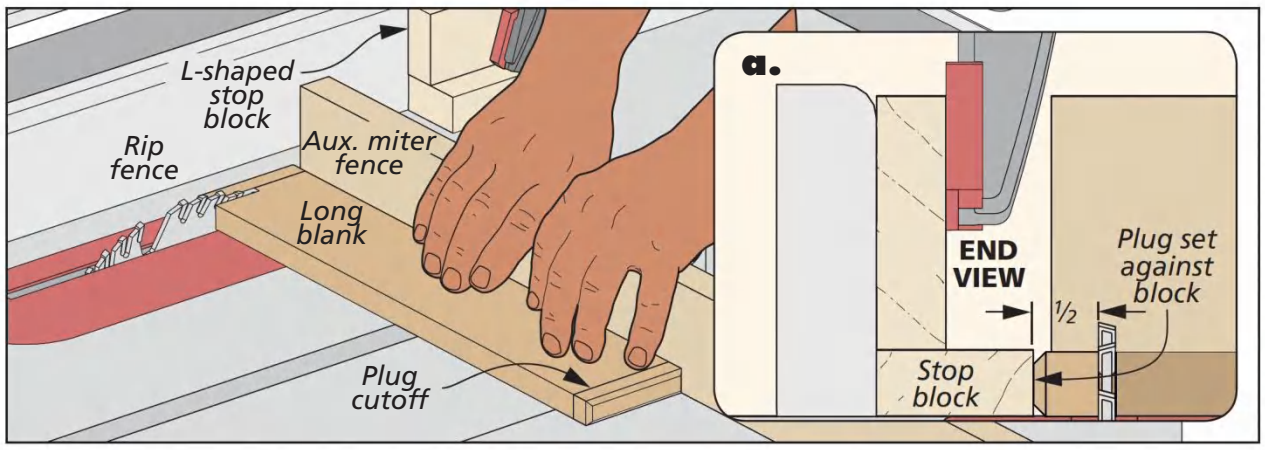

Offset Fence. After chamfering the ends, use the fence of your table saw and a L-shaped stop block to establish the length of the tenon plug.

CHAMFERS. After sizing the blank, chamfer all the edges on both ends of the blank. A chamfer bit in your router table is ideal. Then cut two of the tenons free at the table saw, and repeat the process for all the parts.

FINISH. A light coat of stain followed by two coats of lacquer protects the wood, but lets the beauty shine through. With that, you've completed a nightstand that your descendants will most likely argue over. W

Materials, Supplies & Cutting Diagram

A	Side Stiles (4)	1 x 5 - 30½	**J**	Bottom Panels (2)	11/16 x 8⅛ - 10⅝	**S**	Drawer Sides (2)	½ x 5 - 18¼
B	Side Rails (4)	1 x 8 - 10¾	**K**	Frame Fronts (2)	1 x 5 - 22⅝	**T**	Drawer Back (1)	½ x 5 - 21⅞
C	Side Panels (2)	⅜ x 10⅝ - 14⅛	**L**	Frame Backs (2)	1 x 4 - 22⅝	**U**	Drawer Bottom (1)	¼ ply.- 18 x 21⅜
D	Back Stiles (2)	1 x 2¾ - 30½	**M**	Frame Ends (4)	1 x 2 5/16 - 10¾	**V**	Shelf (1)	1 x 17¾ - 21 13/16
E	Center Stile (1)	1 x 3 - 14¼	**N**	Frame Centers (2)	1 x 3 - 10¾	**W**	Tenons (12)	½ x 2½ -½
F	Upper Back Rail (1)	1 x 8 - 18¾	**O**	Top (1)	1 x 22 - 28	•	(2) Drawer Pulls	
G	Lower Back Rail (1)	1 x 4 - 18¾	**P**	Skirt (1)	1 x 2¾ - 22	•	(24) #6 x 1½" Fh Woodscrews	
H	Back Panels (2)	⅜ x 8¼ - 14⅛	**Q**	Cleats (2)	¾ x ¾ - 2½	•	(4) Stem Bumpers	
I	Fillers	⅜ x ⅜ -12 rgh.	**R**	Drawer Front (1)	¾ x 5 - 21⅞	•	(4) Shelf pins	

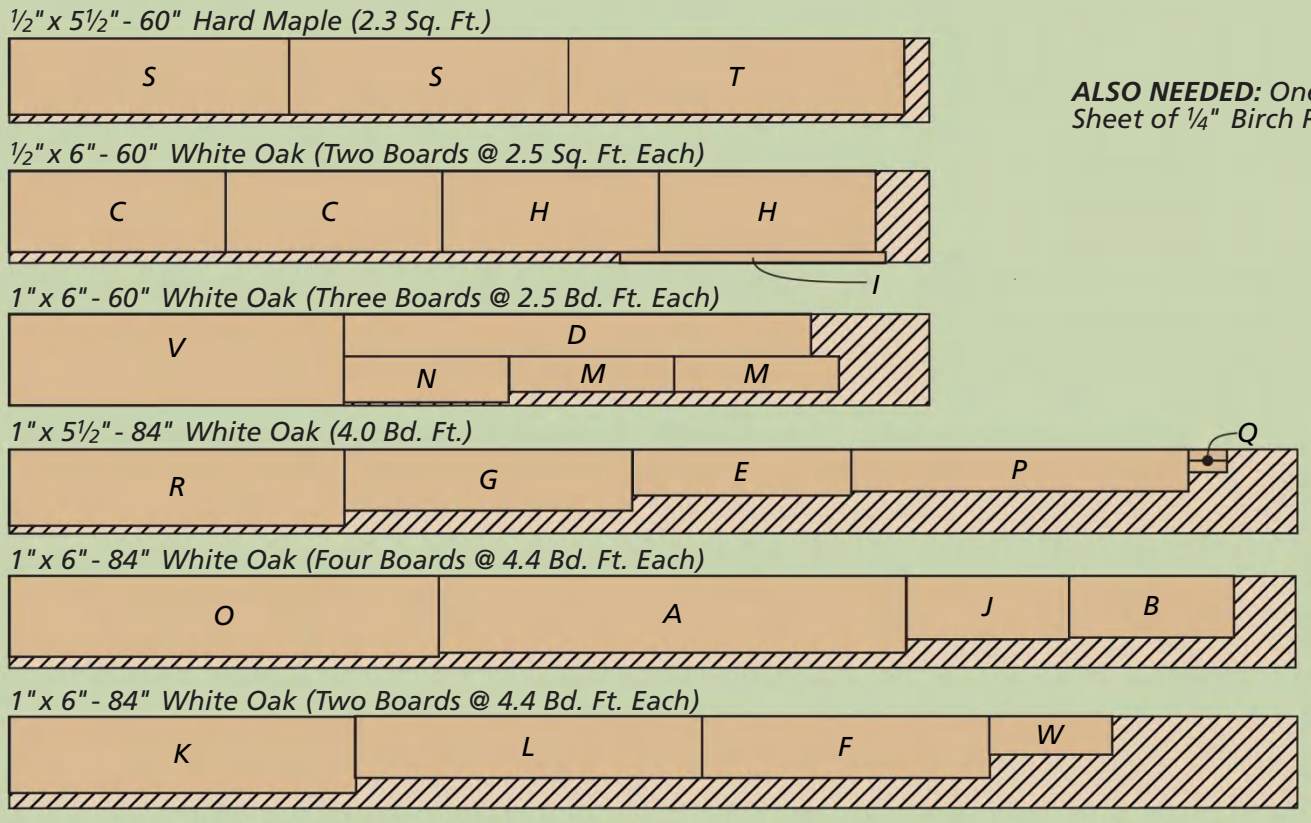

ALSO NEEDED: *One 24" x 24" Sheet of ¼" Birch Plywood*

Deep Reach Clamps

Written by: Erich Lage, Project Design; Chris Fitch

Shop-made, deep reach clamps. They're perfect for gluing up a big panel, and won't break the woodworking budget in the process.

Big clamps aren't often needed, but when they're called for, there's really no substitute. And buying a pair of the same size F-style clamps you see here (8" shown) will set you back on the money you're saving for that new router.

This low-cost alternative is a win-win in my book. It's always fun to do a project that integrates hardware that's out of the norm (barrel screws and a big ol' *Acme* threaded rod). Plus, you can overcome some of the weak-points of store-bought clamp designs — a bar that the clamp jaw slips on. And that's where we started.

A strong BAR

Tight-grained hard maple was the wood of choice for these clamps. It requires a little patience to work with, but it' strength makes it worth the effort.

The drawing below shows you all the information you need for the bar. Start by cutting the blank to final length, but leave it wide for the moment.

DETAILS OF A STRONG BAR. When I mentioned overcoming clamps weak-points earlier I was thinking of one thing — jaws that slip on the clamp bar. The nicely defined backbone of this bar all but eliminates that problem. At the drill press, lay out and drill the holes that will create the scallops on the back of the bar (Figure1). Then, take the bars over to the table saw. There, you can rip the bars to their final width (Figure 2). This creates the scallops that the clamp jaw hooks into.

DRESS THE BAR. Back at the bench, sand all surfaces smooth. Rout the edges with a ⅛" roundover bit. (This bit is used on all the edges of the clamp parts.) Now you're ready to make the jaws that partner up with this bar.

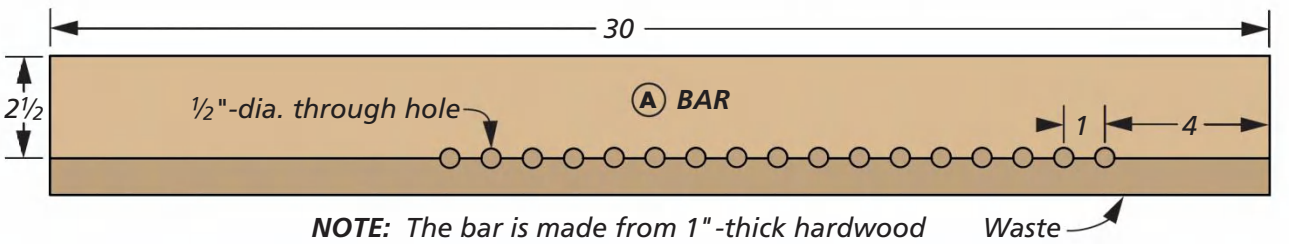

MAKING THE BAR

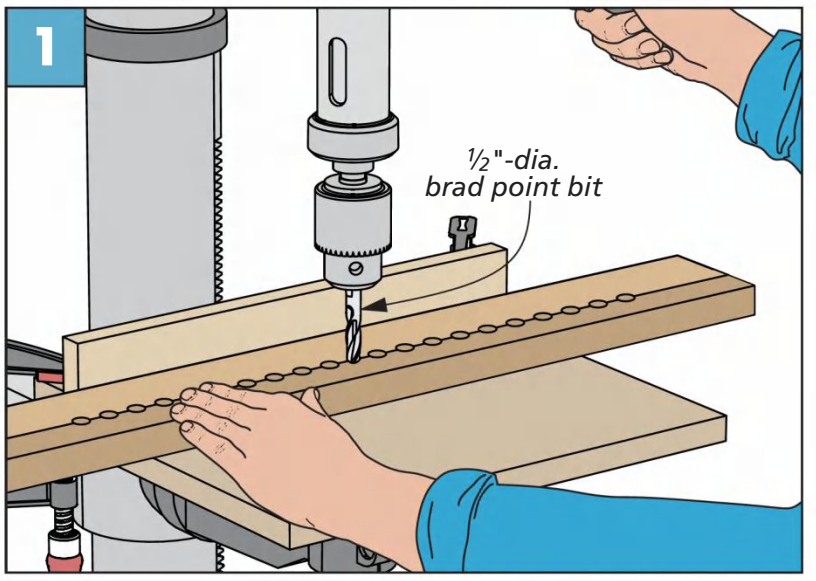

Drill Press First. Drill the holes at the drill press. The hole pattern doesn't have to match exactly from bar to bar.

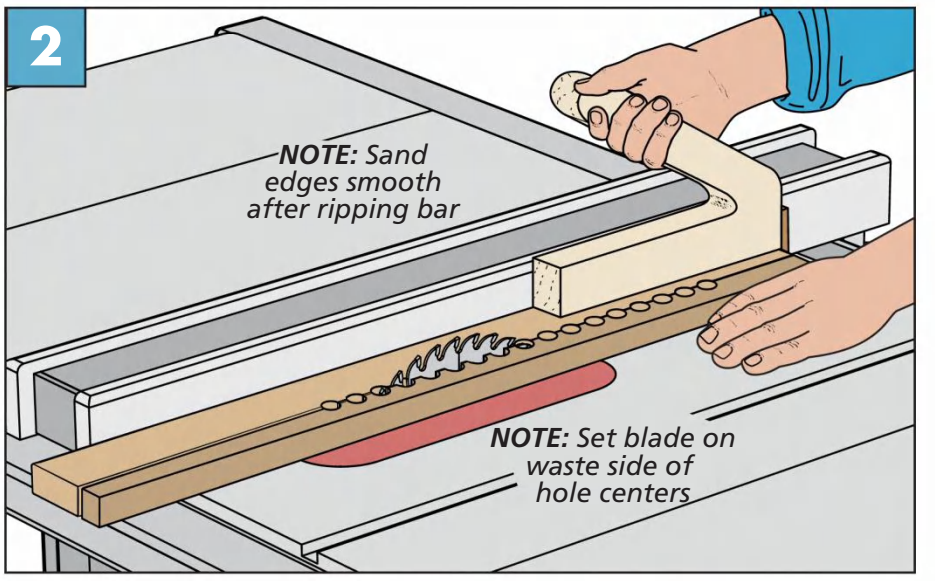

Table Saw Second. Rip through the hole array on the bar to make the scalloped backbone for the clamp jaw.

Illustrator: Bob Zimmerman

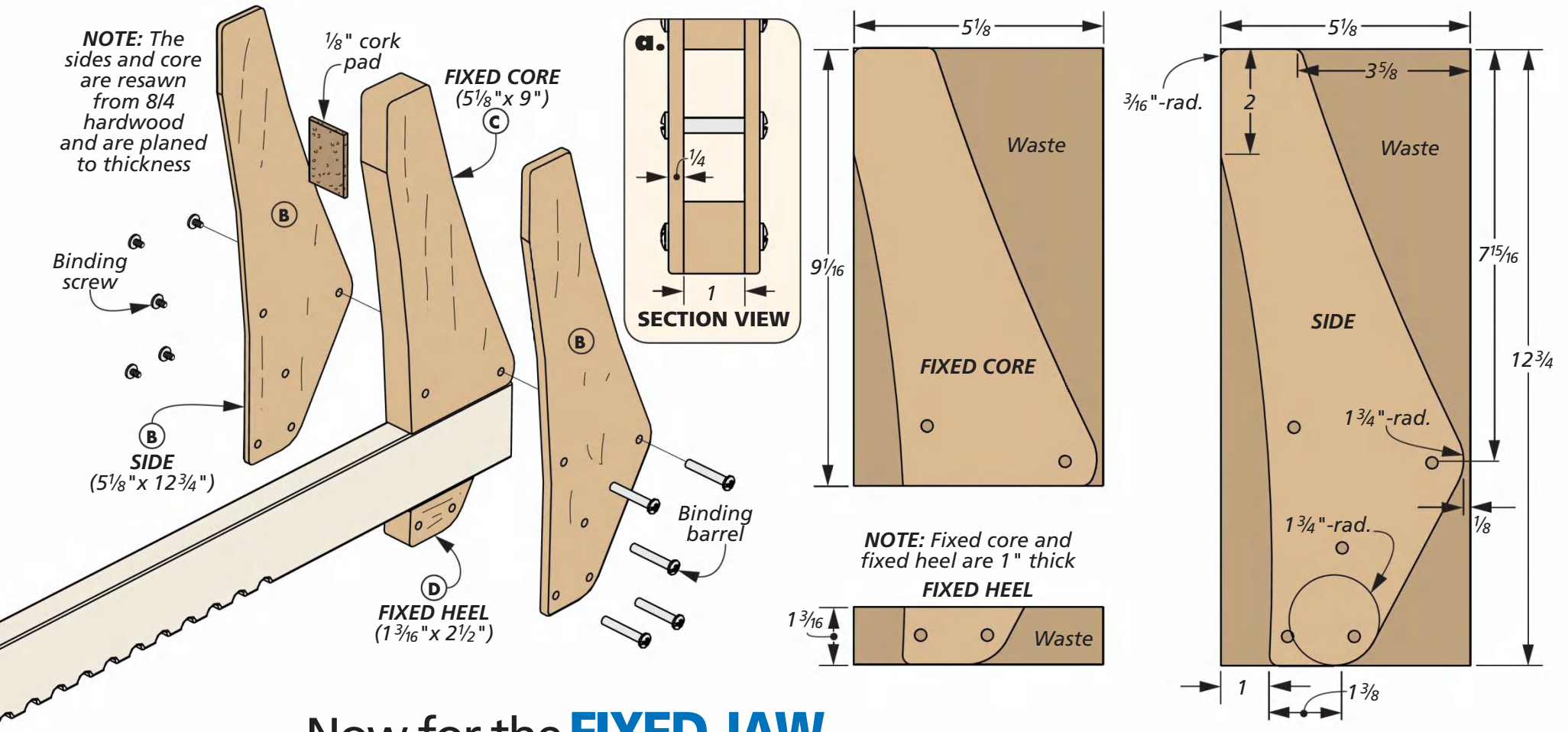

Now for the **FIXED JAW**

The bars you've just made need to partner with jaws that are worthy mates. You have two jaws to make — a fixed jaw, and a sliding jaw. Both jaws have sides, a core, and a heel. As you see in the details above, the profiles of both are the same, but the inner workings are different.

After cutting the blanks to size, and resawing the sides like the box below shows, I set aside the material for the sliding jaws, and focused on the fixed jaws first.

As you see in the drawing above, the jaw at the end of the bar is fixed — it's bolted to the bar. The inner pieces (the core and the heel) are the same thickness as the bar. But it's important to note the grain on the fixed heel runs perpendicular to the rest of the jaw. This was done to add strength where there's going to be a lot of stress on the clamp.

FIXED CORE. Now you can plane the fixed core to thickness. But don't shape it yet, you'll do that after the parts are glued back together. The heel is next.

FIXED HEEL. As I mentioned earlier, the grain of the heels runs perpendicular to the jaw, so it's going to require a piece of hardwood that isn't from the same blank as the other parts. But plane it to the same thickness as the fixed core. Now you can glue up the fixed jaws.

FIXED JAWS. Since the opening in the fixed jaw is square, glue each one up with a scrap the same size as the bar (coated in wax) as a spacer. The final step before shaping the blank is drilling the holes for the barrel screws. (Side detail, next page.)

Shaping the completed fixed head is done at the band saw. Followed up with some sanding, and routing the edges with a roundover bit. Slide the jaw in place, and bolt it to the bar. Now you're ready to tackle the more complex sliding jaw.

RESAWING THE JAW BLANKS

▲ Resawing the sides for the jaws is done at the the table saw. A sharp thin-kerf blade works well here. Over at the bench, I used a hand saw to cut the sides free. Finally, plane all the parts to their to final thickness.

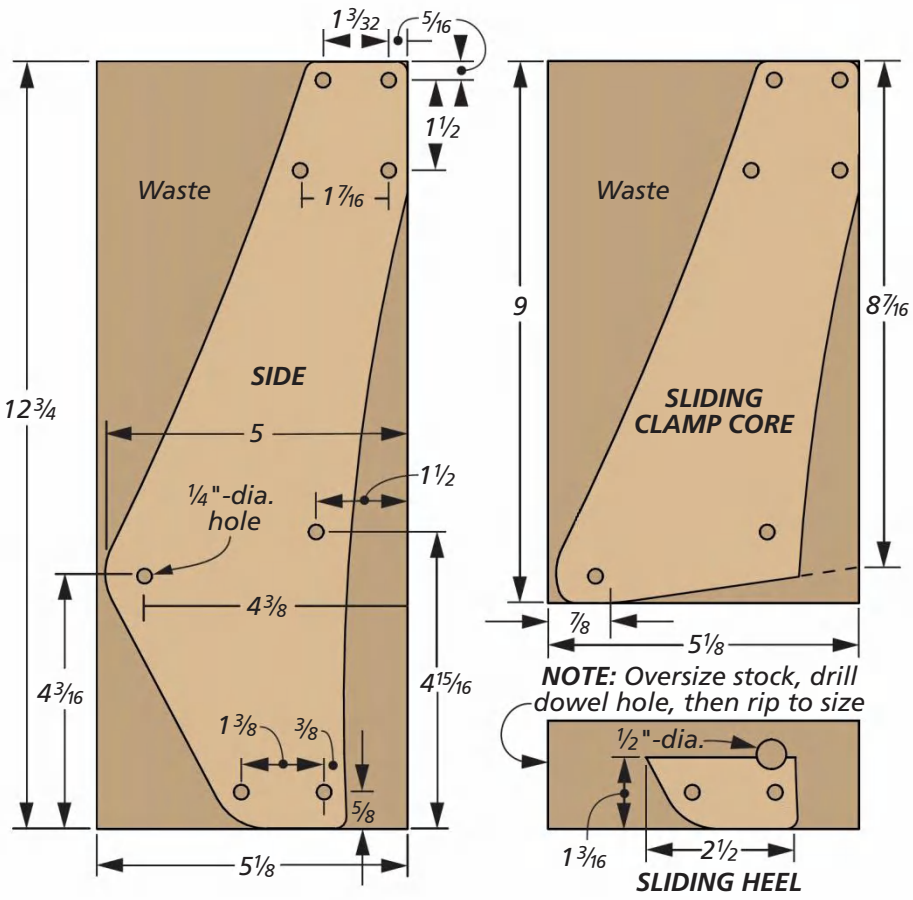

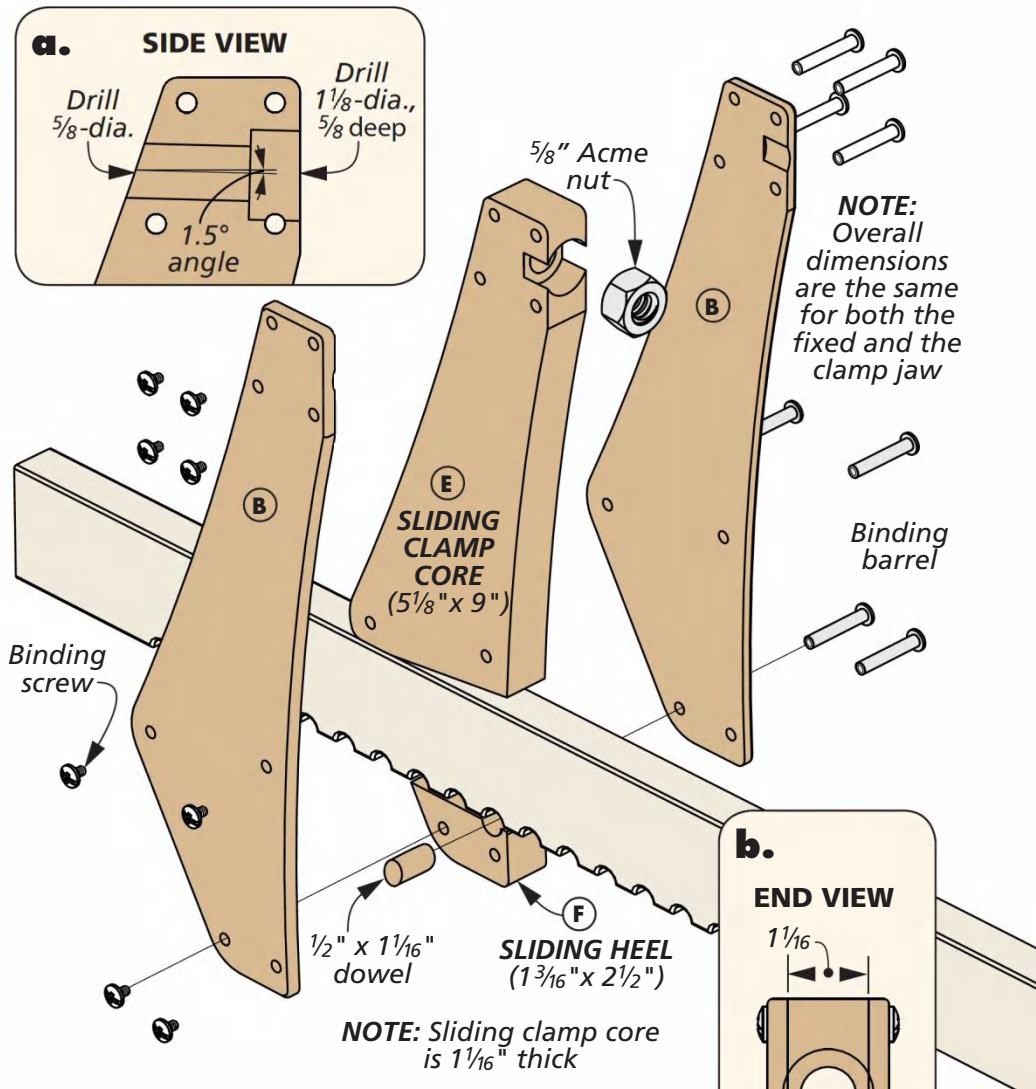

Adding the **SLIDING JAW**

Because of the dynamic nature of the clamp jaw, it's a got bit more going on the inside. On the back end, the heel travels up and down the bar engaging the scallops to hold it in place. While on the front end, the screw mechanism that does all the clamping comes into play. Later, we'll work on that. For now there's the heel to contend with.

SLIDING HEEL. If you take a gander at the sliding heel, and the core details above, you'll see what I'm talking about. There's a dowel that's glued in the heel to engage the scallops on the bar. I used a similar tactic here as I did on the bar. After sizing the heel, I went to the drill press and drilled a hole for a dowel. Then at the table saw, I ripped away a section of the heel, leaving a space to glue in the dowel.

The dowel is the same length as the thickness of the heel. Remember, the heel and core for the sliding jaw are thicker than the bar, allowing the jaw to slide up and down the bar. The clamp core detail above shows how to shape the inner wall.

GLUE UP SLIDING JAWS. When that's done, you can glue up the sliding jaw parts. Next, there's a hole in the end to house a nut that the screw mechanism will run through.

HOLES FOR SCREW. Lay out and drill the countersink hole in the sliding screw for the nut that guides the screw. Then drill the through hole. Detail 'a' above shows the slight angle of these holes, (the through hole goes through what will be the jaw profile).

INSTALL THE NUT. After filing the corners of the nut for a smoother fit, it can be epoxied in place. To ensure the screw travels properly through the jaw, you'll want to thread it into the nut before the epoxy cures. Now shape the profile before moving on to the screw mechanism.

ANGLED DRILLING

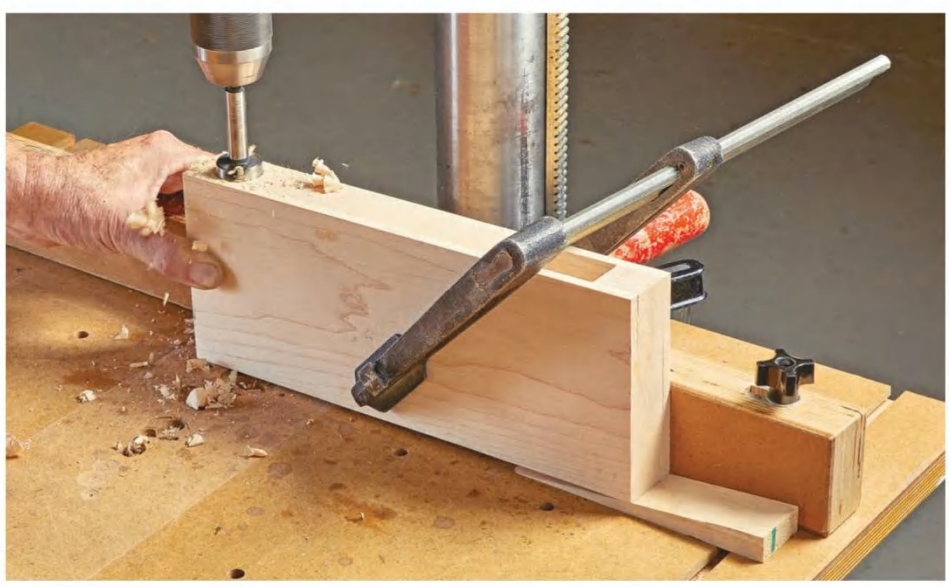

▲ Drilling the hole for the screw nut is done with a Forstner bit at the drill press. A simple wedge under the far end of the jaw blank will set the angle you want. Follow up with the pilot hole for the screw.

GO 2 Online Extras

All patterns for the deep reach clamps can be found on our website: Woodsmith.com/252

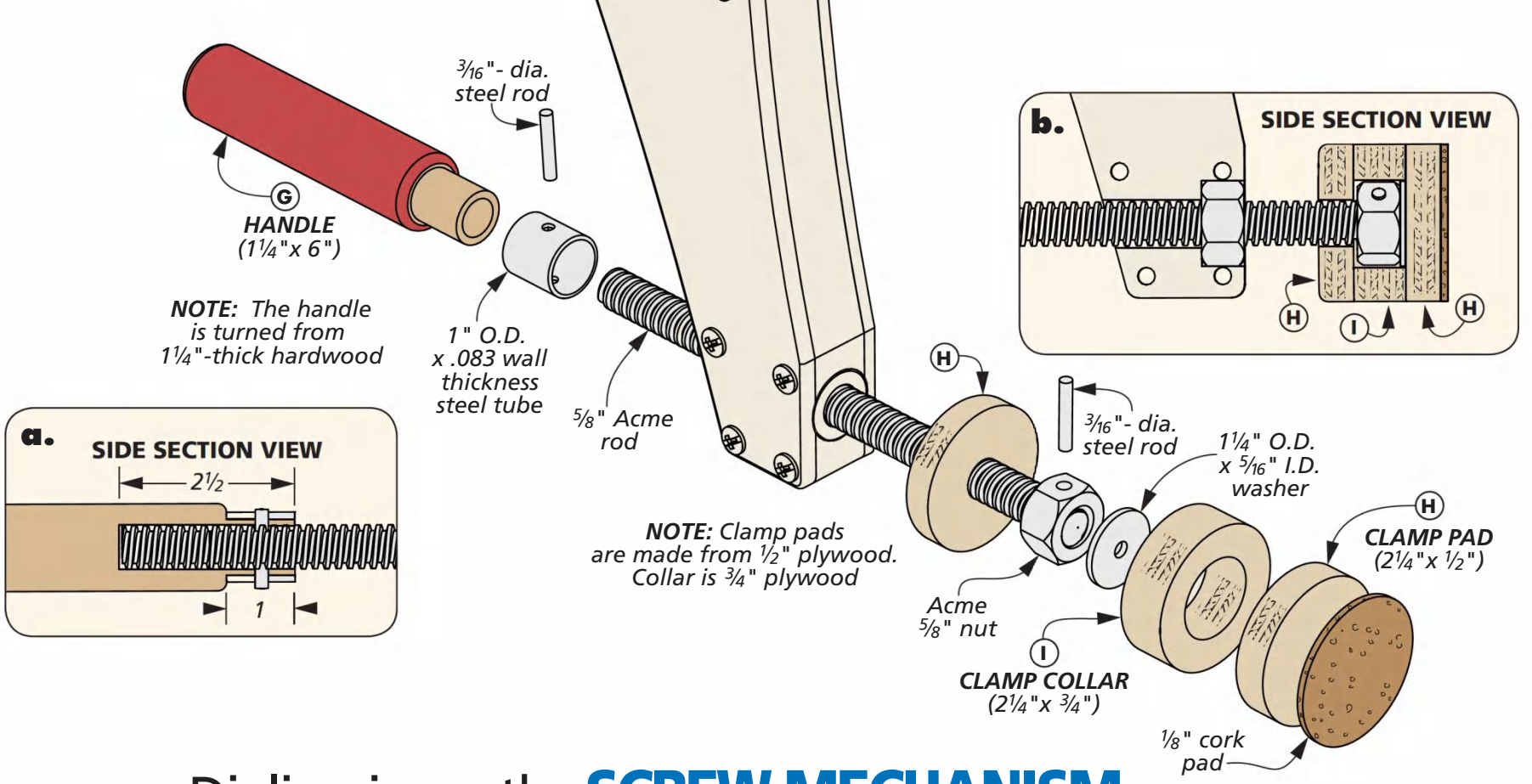

Dialing in on the SCREW MECHANISM

Now it's time to focus on the business end of the clamp jaw — the screw mechanism. The assembly consists of three components, a handle, the screw, and a clamp pad. All these parts, and how they interconnect, are shown in the drawing above.

The next page provides the step-by-step assembly information. Here, I'll add a few details that will help along the way.

GET A GRIP. The handle is turned from a piece of hardwood. You could make the handle from a dowel, but fitting the ferule is a lot easier this way (Photo 1).

HEAVY METAL. Dab some epoxy in the hole for the screw and roll the end of the screw in epoxy as well (Photo 3). Don't skimp on the quality of the epoxy you use here. The longer the epoxy needs to cure, the stronger it is.

CLAMP PADS. Three plywood parts make up the clamp pad. The base pad goes on first. Before installing the two remaining pad parts, you need to attach the nut to the end of the screw. The nut is epoxied and peened on the end of the screw (Photos 6 and 7). The collar slides over and houses the nut and pressure plate. The three parts are then glued together (Photos 8 and 9).

PATIENCE. After applying a coat of oil, the clamps will be ready to tackle large clamping duties in your shop. It's tempting to give them a trial cranking. But letting your new clamps cure a few days is a good idea. Maybe start shopping for that new router while you wait. W

GO 2 Online Extras

For templates to build the 10" and 12" clamps, go to: Woodsmith.com/252

Materials, Supplies & Cutting Diagram (for two 8" clamps)

A	Bars (2)	1 x 2½ - 30
B	Sides (8)	¼ x 5⅛ - 12¾
C	Fixed Cores (2)	1 x 5⅛ - 9
D	Fixed Heels (2)	1 x 1³⁄₁₆ - 2½
E	Sliding Clamp Cores (2)	1¹⁄₁₆ x 5⅛ - 9
F	Sliding Heels (2)	1¹⁄₁₆ x 1³⁄₁₆ - 2½
G	Handles (2)	1¼ x 1¼ - 6
H	Clamp Pads (4)	½ ply. - 2¼ x 2¼
I	Clamp Collars (2)	¾ ply. - 2¼ x 2¼

- (26) ¼"- dia. Binding Barrel Screws
- (4) ⅝" Acme Nuts
- (2) 1" O.D. x .083" Steel Tubes
- (2) 1¼" O.D. x 5⁄16" I.D. Washers
- (4) 3⁄16"- dia. Steel Rods
- (2) Acme ⅝" x 6" Screws
- (4) 1⁄16" Cork Pads
- (2) ½" x 1¹⁄₁₆" Dowels

1"x 7½"- 36" Hard Maple (2.3 Bd. Ft.)

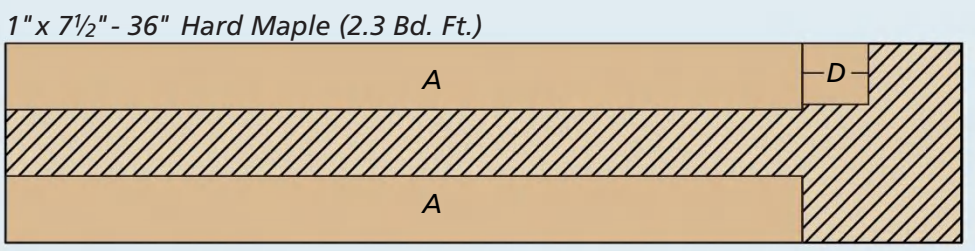

ALSO NEEDED: *One 12"x 12" Sheet of ½" Baltic birch Plywood, One 12"x 12" Sheet of ¾" Baltic birch Plywood*

1¾"x 5½"- 62" Hard Maple (4.7 Bd. Ft.)

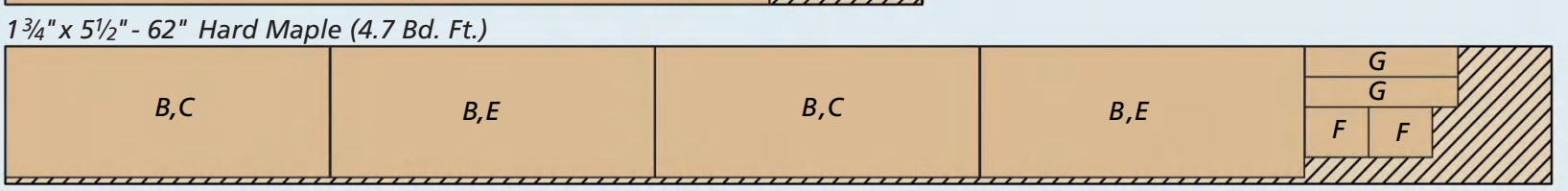

ASSEMBLING THE SCREW MECHANISM

Handle/Ferrule. After turning the handle, turn the section that holds the ferrule with a friction fit.

Drill the Handle. To drill the hole for the screw, clamp the handle in a V-grooved block to the drill press fence.

Epoxy the Screw. Line the base and walls of the hole with epoxy. Coat the end of the screw as well.

Ferule Pin. At the drill press, drill a through hole for the pin. Oil the bit as you go to ensure smooth cutting.

Peen the Pin. Use the anvil surface on your vise to peen the pin on both sides of the metal ferule.

Drill Pad Nut. More patient drilling needs to be done at the other end of the screw mechanism.

Peen Pad Nut. The washer provides room for the peening this time. Also, the pin will be hid in the clamp head.

Assemble Foot Base. Apply glue to the clamp pad that's underneath the nut. Then drop the collar in place.

Foot Final Assembly. Place the pressure plate (a washer) on the nut before gluing the clamp pad.

Painting with a Spray Gun

High quality spray guns will typically have upgraded features, like all-aluminum pressure regulators and cups.

Are you ready to judge me? I love painting projects. There, I said it. Whenever I have a project that I know I am going to paint, I get a little giddy because I know that I get to use one of my favorite finishing tools: the spray gun. And as much as I enjoy painting a project, what I don't like is using a brush or a roller.

Painting a project with a spray gun can be one of the most rewarding tasks in the shop (in my opinion). Seeing that ultra smooth, even coat get perfectly laid down and settle is satisfying. But using a spray gun can also be infuriating. If one thing is off, you can end up with a finish that you're not happy with. To get the best results, I'm going to walk you through the process that I use to spray a project with paint and I've found gives good results.

IT ALL STARTS WITH THE PAINT. Achieving a great paint job starts with picking a quality paint. (For this article, I'll be focusing on water-based paints, but everything here applies to oil-based paint as well.) Have you ever applied paint and it seems to take fifty coats to get even coverage? My bet is that the paint was the culprit. Not only will a high-quality

Written by: Logan Wittmer

paint have more pigment (and therefore cover better), it will apply more smoothly and be more durable. The take away here? Don't skimp on the paint. Head to a professional paint store to select paint.

As a side note, I prefer to paint most projects with either a water-based acrylic, or a paint like *General Finishes'* Milk Paint line. If it's a shop project, I've started to lean more on the *Rustoleum* hammered finish. I just like the textured look it gives.

A GOOD FOUNDATION. After selecting paint, it's time to start the prep work. And I know you've probably heard it before: a finish is only as good as the surface below it. And that's true with paint as well. Sort of. Paint obviously lets you mask minor defects with filler. So, I start by filling any nail holes, dings, or other imperfections. I usually use *Bondo* body filler (yes, the stuff for cars) or vinyl spackle. After sanding everything smooth, it's time to prime.

I know that conventional wisdom tells you to use a paint primer. However, water-based primers will cause some fibers to raise and you'll have to sand down the surface after the initial priming coat. And I hate sanding. So to avoid that, I've switched over to spraying a clear "barrier" primer, like you see in the photo below. Most of the time I use spray lacquer. It dries smooth and paint will stick to it.

If you're not setup to spray lacquer, thinned-down shellac works as well. It keeps the wood fibers from soaking up the paint, giving better and more even coverage (but, if you've chosen a good paint, you shouldn't have coverage problems). As a rule of thumb, I usually like to give this coat a few days to cure before going to painting (even though they dry quickly). Even with this primer coat, I will give it a quick once-over with 220-grit sandpaper to remove any nibs or clumps before painting.

Zahn Cup. Use a Ford #4 sized *Zahn* cup to test out the viscosity of your paint. Old paint may be thicker and require more thinning. Mix in the appropriate solvent using a drill-mounted paint stirrer.

PREP YOUR PAINT. After the sealing or primer coat is dry, you can prep your paint. Here's where you'll really want to be thorough. When it comes to spraying, the first thing to make sure is that the paint is the correct viscosity. To do this, test out your paint using a Zahn cup, like you see above.

You'll have to match up the time the cup takes to drain with the instructions on your particular paint gun. For the *Iwata* seen in the main photo, the cup should take between 18-28 seconds to drain, depending on the type of paint. If it's too slow, mix in some water (or mineral spirits for oil paint) and test it again.

THE RIGHT TIP. Speaking of checking your paint gun instructions, before you dump the thinned paint into your cup, you'll want to make sure you have the correct tip configuration installed on your gun, based on the manufacturers instructions. Most guns will need a 1.5mm - 2.2mm needle to spray paint smoothly.

Sealing Coat. When it comes to a primer, I use a neutral clear coat such as lacquer or shellac. I use a secondary spray gun designed for solvent finishes, but you can also use spray cans purchased from the paint store.

Illustrations: Bob Zimmerman

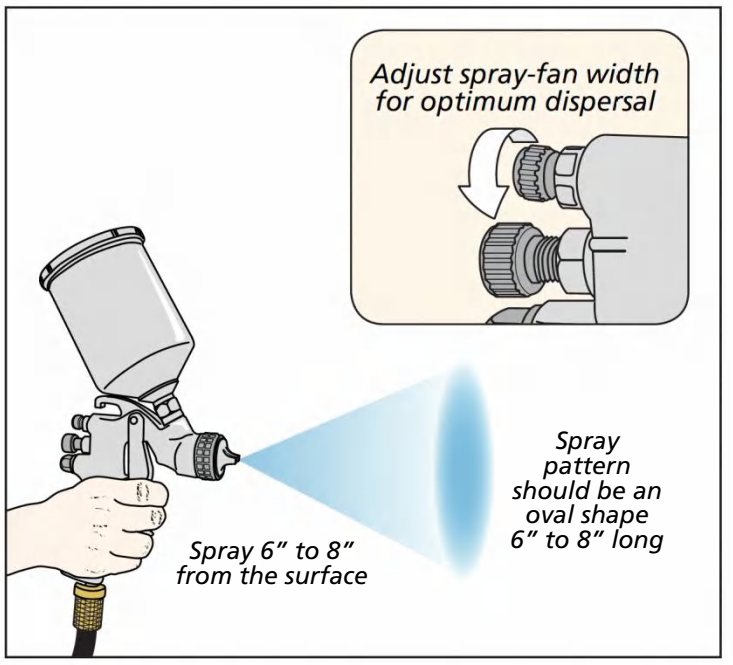

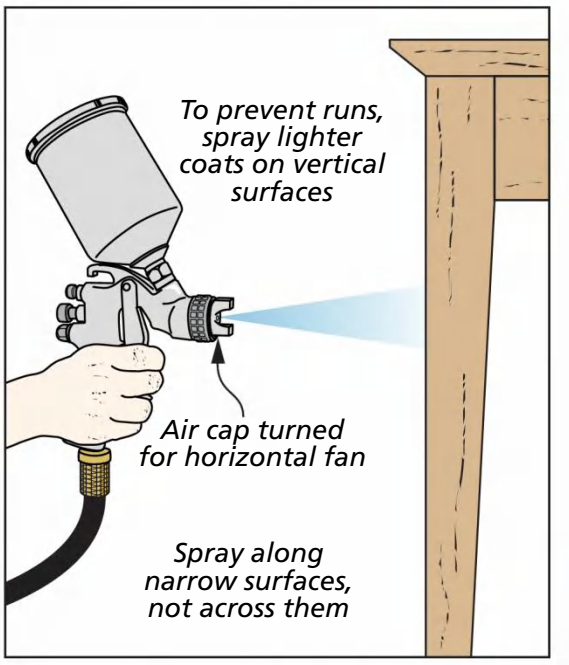

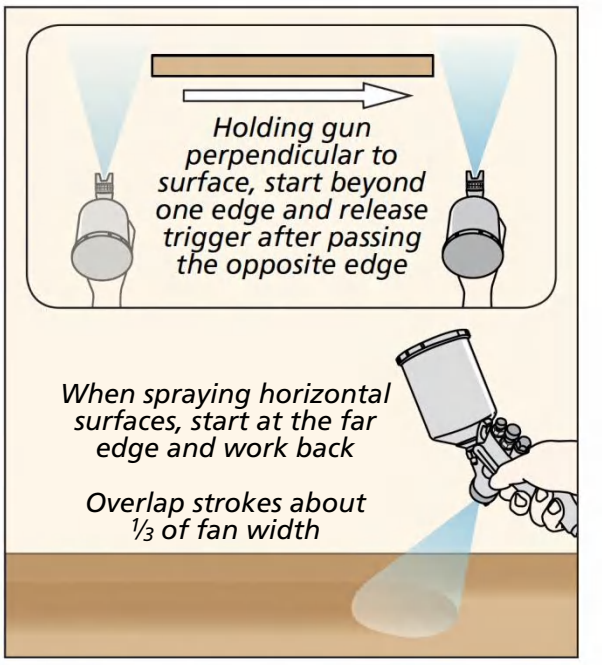

Even with low-toxicity paints, It's important to wear a respirator when spraying them.

After dumping the paint into your cup, hook up the gun to your compressor and set the pressure. I use a regulator at the gun to set pressure (you might have to pull the trigger partway to get a pressure reading).

Most guns will have a few adjustments that adjust airflow, paint flow, and the pattern orientation (left drawing, above). Take a few minutes to spray some patterns on a piece of plywood or cardboard to dial in the settings. You're looking for a even, smooth oval. If you are getting splattering or odd shaped patterns, check your manual, as they'll often have suggestions to remedy these.

APPLY THE PAINT. When painting, I like to hit hard-to-reach areas first, such as corners and inside rails and stiles. Here, I like to orient it so that the pattern crosses the corner, not follows it. Then, I'll switch over to doing the flat areas, such as panels, stiles, and tops.

Like other forms of finishes, many light coats are better than one heavy coat. Start with your gun to the side of your spray area. As you start to spray, make a sweep across the project, keeping the gun 6"-8" away from the surface (right drawing, above).

If you do get drips or runs, avoid the temptation to wipe it off. I've found that comes with its own set of problems. Instead, wait until it's dry and scrape it off with a razor blade. Then sand and apply a second coat.

CLEAN UP. Depending on what type of paint you're spraying, you can leave the paint in the gun for a few hours until the next coat. But, after you're done for the day, it's time to clean up

HVLP/TURBINE GUNS -VS- GRAVITY/COMPRESSOR GUNS

Two Ways to Spray. HVLP (High volume, low pressure) spray guns are all-in-one units that use low pressure air to spray finishes. They are more efficient when it comes to applying finish (less finish is atomized outside the spray area). Compressor guns (such as a gravity or suction cup guns) hook up to an air compressor and demand higher PSI, but with less volume. Gravity fed guns are better at breaking up and atomizing a thick finish (such as paint).

A HVLP system such as the *Earlex 5500* is a good quality, all-in-one unit that can be carried around and operated with an extension cord.

The WX-400 from *Anest Iwata* is a professional-grade spray gun that needs an air compressor and will spray a variety of finishes.

and this is where many people experience a headache with guns. I've outlined my clean up procedure in the photos below, and found it works well for me.

With your sprayer cleaned, you can literally sit back and watch the paint dry. Spraying paint is pretty straightforward. However, the different types of guns and accessories available can get a little confusing on what is the best one to use. On the next page, I've outlined a few of my must-have spraying accessories, along with a little bit on HVLP compared to gravity-fed guns.

As long as you follow these steps, you're sure to get a silky smooth finish on your next painted project. W

Dump Paint. Return unused paint back to the can, or in a separate container if you didn't thin the entire can.

Flush the Gun. Fill the cup with water and pull the trigger (without air) until the water runs clear, and wash the cup.

Clean Nozzle. Disassemble the gun and clean the internal needle, nozzle, and tip of any paint.

PAINT SPRAYER ACCESSORIES

The Little Things. Like many things in life, sometimes its the little things that make stuff easier. Here are a few of the accessories that I like to have when spraying a finish that make the task go smoothly.

A quality cleaning kit will keep your spray gun in working shape and has specialized tools for all the small areas in a gun.

A gun stand mounts to the bench and holds a strainer and gun for filling.

A drill mounted paint whip makes mixing paint quick and easy.

A spray-gun specific regulator shows you exactly where to set the air pressure for your spray gun.

Spiffy Threads

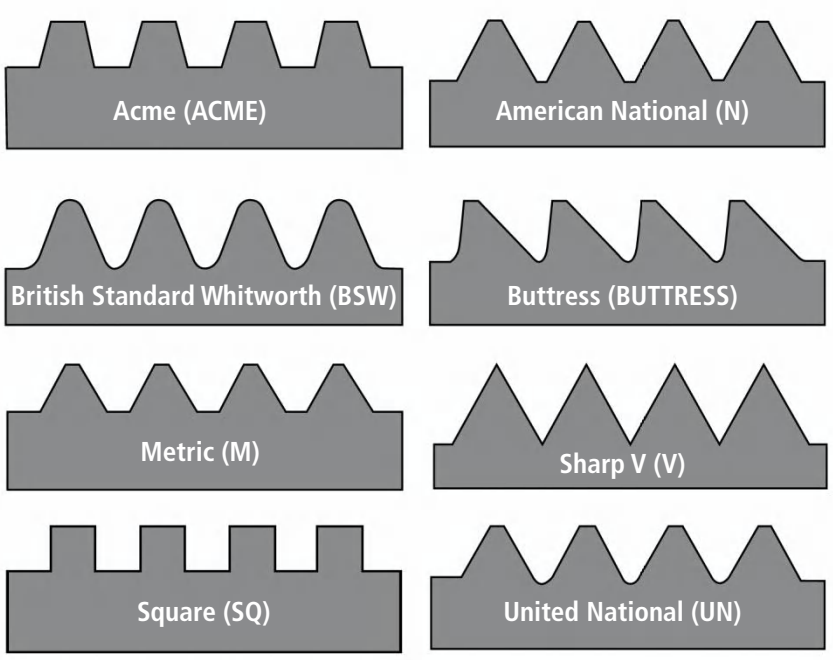

Thread Shapes. One outcome of the industrial revolution was a wide variety of thread designs, from common to specialized.

When talking about woodworking, threads and all the nomenclature that goes with them may not be at the top of your mind. But knowing the different types of thread styles and where they are used is beneficial, even in a woodworking shop.

LOTS OF SHAPES. As you see in the illustration to the left, thread profiles come in numerous different styles. There are two styles that we often use in the shop. The first, and most common, is the "V" style. This is found in bolts, threaded rod, and in wooden screws (such as the main photo, above). Another shape that you may be familiar with, and often gets used in woodworking is the Acme thread. This trapezoidal profile is stronger than the V shape, and often is used where speed and force are needed. Take a look at your own vise. More than likely, it includes at least one Acme threaded rod.

TERMINOLOGY. When selecting and using threaded rods or bolts, there are a few differences to know and understand. Luckily, you've probably encountered them before. The first thing to know is the diameter of the thread. This is usually the major diameter — the diameter

Written by: Logan Wittmer

measured across the tops of the threads. The minor diameter would be the diameter of the root of the rod or bolt.

The second is the pitch of the thread. This is expressed as TPI or threads per inch (in metric, this is the distance from one thread to another). You will often see bolts listed with these two measurements. A ¼-20 bolt designates a ¼" diameter shaft with 20 threads per inch.

SHAPE & SIZE MATTERS. You may wonder why there are numerous shapes of threads, along with different sizes and pitches. These all have to do with the function of the thread. The coarser the thread, the faster the bolt or threaded rod will advance. Looking at the main photo on the previous page, the large wooden screw will advance at a faster rate than the Acme rods next to it.

It's also important to understand the relationship between clamping force and thread pitch. Generally, the higher the pitch (more TPI), the better the mechanical advantage the thread gives. So, for more clamping force or pressure, choose a thinner thread.

USES IN THE SHOP. As I mentioned before, Acme threads are often found in bench vises. They're also commonly found in CNC lead screws. They're a good choice for when the threads need to have strength, but also move fairly quickly.

In my shop, standard V-threads get used mainly in bolts, knobs and jigs. While you can attach a studded knob into a threaded insert or T-nut, you can also directly thread the wood using a specialty tap. See the box below for more on cutting threads in wood.

An Acme thread, such as the one found on most vises, is a good balance of speed of use (travel distance with one turn of a handle), clamping force, and thread strength.

While choosing a bolt or a piece of threaded rod is usually as simple as picking the correct sized one out of a bin at a hardware store, it does come in handy to be aware of what the name and numbers mean on the bolt. That way, when you need a piece of threaded rod or bolt for a specific purpose, you can choose just the right one for your shop. W

THREADING & TAPPING WOOD

Wood Threads. Cutting threads in metal with a tap is pretty common. But, taps can also be used to cut threads in wood. These, shown here, are designed to be used in wood and are a hair sharper than their metal brethren. After drilling a pilot hole, the tap is screwed into the hole, cutting the threads. To help harden the threads, I like to saturate the threads with thin CA glue. In addition, you can cut male threads on dowels using a tap box, like you see below. These tap boxes are made for one specific size, and not only include the box for the male threads, but the tap to make the mating threads.

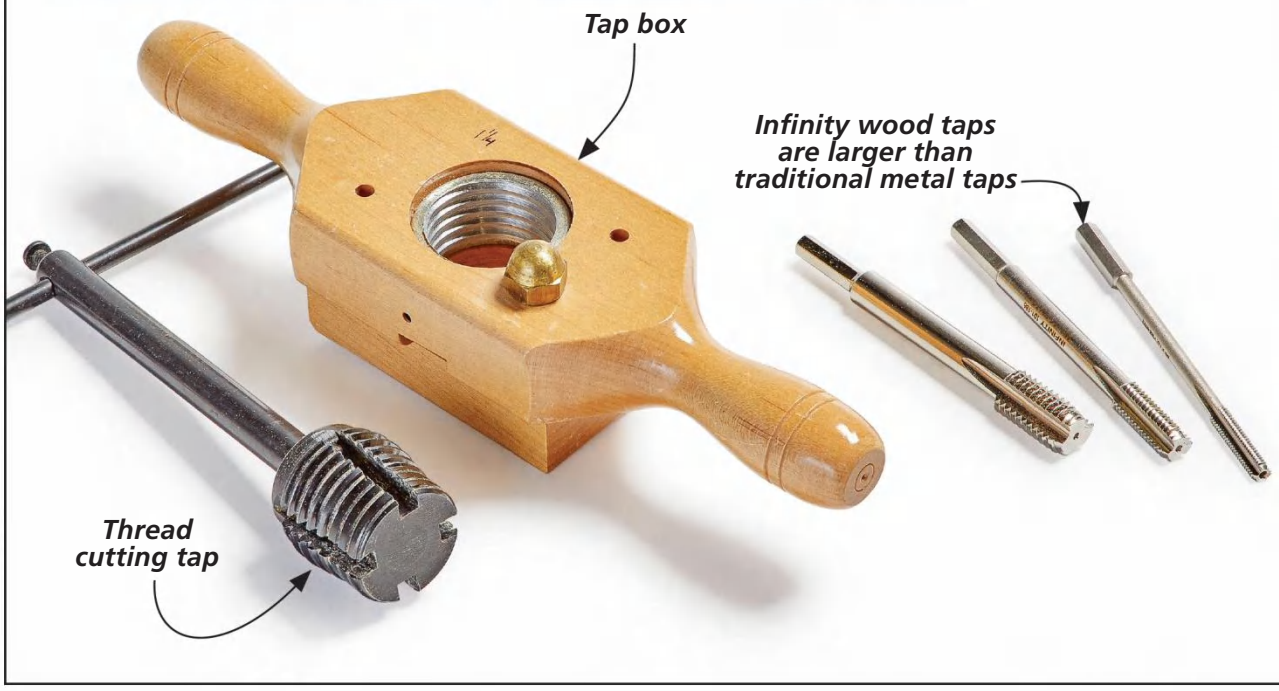

A tap box cuts the male threads on the end of a wood dowel, and can be combined with a tap.

Illustrations: Bob Zimmerman

ZeroPlay 360 Sled Kit

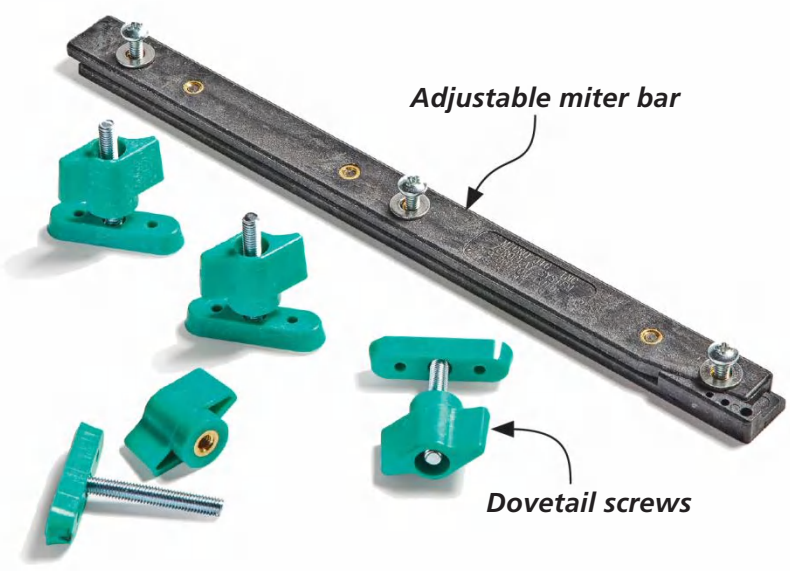

The *ZeroPlay 360* kit comes with a miter bar and four dovetail screws. You need to supply the plywood components — and imagination.

After 40-plus years of producing woodworking furniture plans, can you guess what our most popular plans are? Jigs. Yup, I'm a little surprised by that, too. Considering all the outstanding bookcases, dressers, beds, and boxes, it's amazing that table saw sleds could beat all that.

I think the reason for that popularity is that a reliable crosscut sled — or other jigs — can be used on all kinds of woodworking projects, regardless of their style. And not everyone has the same furniture taste, or needs.

The thing about designing and making jigs is that it can quickly become a rabbit hole. I've heard quite a few woodworkers declare they prefer making furniture over building jigs.

Matchfit AP clamps have an anti-pivot foot to grip a workpiece of almost any size and shape.

In an effort to bring those two camps together, I submit for consideration the *ZeroPlay 360 Sled Kit* from *MicroJig*. This hardware kit, shown in the left margin, provides some essential

Written by: Phil Huber

The plastic key on the dovetail screw slides into a complementary groove cut into the platform of the jig. The grooves also accept the head clamps to increase workpiece control and safety.

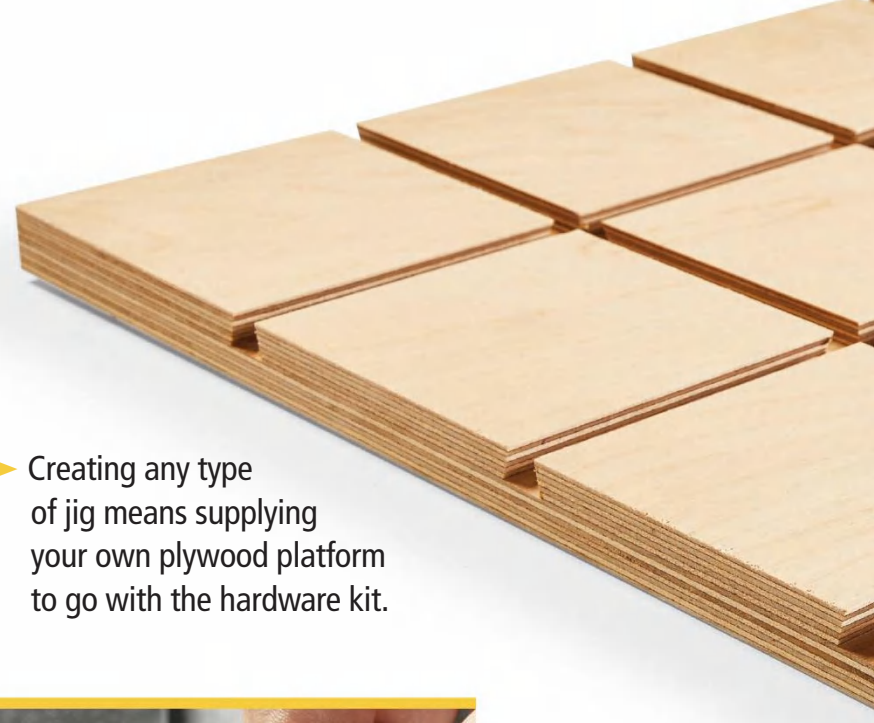

Creating any type of jig means supplying your own plywood platform to go with the hardware kit.

The two halves of the miter bar are tapered to customize the fit to the miter track in your table saw.

supplies to speed up the process of designing and creating your own jigs. Let's take a look at what the kit includes and how you'd put it to use in your shop.

WHAT'S INCLUDED. The kit isn't a sled itself. Instead, it provides some key items. The most familiar is the adjustable miter bar. On the surface, it doesn't seem like a big deal. Adjustable miter bars appear on most woodworking retailer's sites. The way this one adjusts is what sets it apart.

The bar consists of two parts with tapered mating edges. As the parts slide back and forth, the overall width of the bar increases or decreases. An adjustment screw on top of the bar allows you to dial in the fit of the bar while it's still in the miter slot, as shown in the right photo. This saves a lot of back and forth in getting a smooth-sliding fit without any play in the slot.

Threaded holes on top of the bar allow you to attach it to the sled from above.

DOVETAIL SCREWS. The other part of the kit, four "dovetail screws," are what make the kit sing. These screws sport a dovetail-shaped key. They're designed to slide in matching grooves cut into the surface of jigs and sleds. You can see this in the photo above and the main photo on the previous page.

The grooves take the place of extruded aluminum T-track that's often used in shop-made jigs. The screws and knobs add flexibility, allowing you to secure fences or stops anywhere you want, instead of being tied to a piece of T-track.

AP CLAMPS. The concept of adding dovetail-shaped grooves to jigs and worksurfaces gained traction with *MicroJig's Match-Fit AP* dovetail clamps released several years ago. While the clamps aren't part of the kit, I consider them an essential part of the system and worth getting.

Recently, the clamps were upgraded to provide a more secure hold on narrow and odd-shaped workpieces. An auxiliary anti-pivot foot slips over the swivel end and prevents the clamp from slipping off a workpiece, as shown in the right photo on the previous page.

A SIMPLE SLED. One way to get an idea for how to put this kit to use is to make a crosscut sled like the one at left. The slots accept a fence and clamps for making 90° cuts as well as miters (shown in the photo on the previous page). Next we'll look at making the grooves.

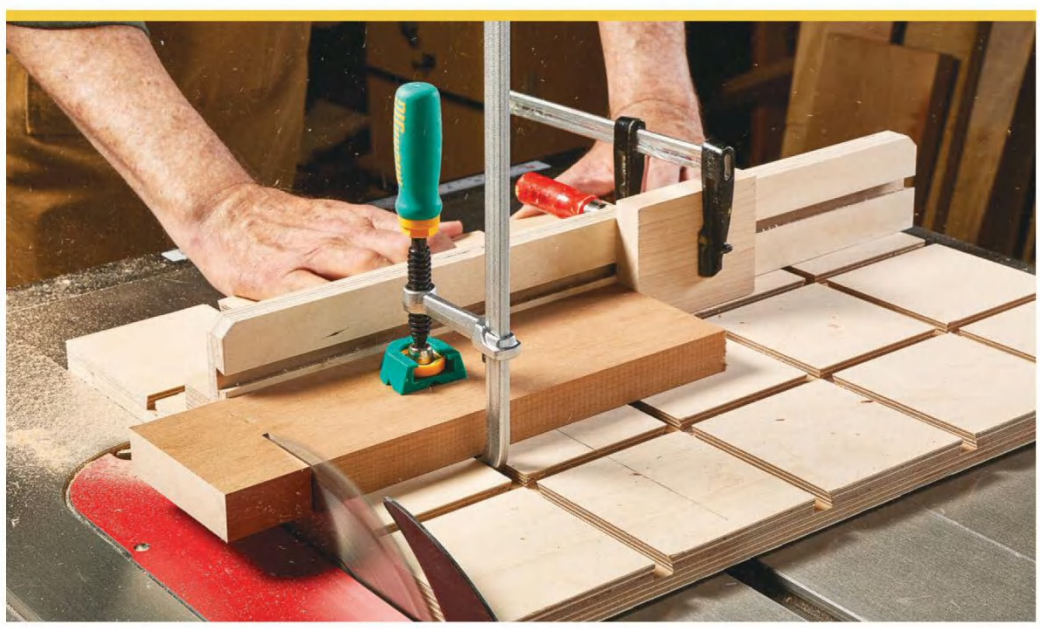

A crosscut sled stands at the top of the list for table saw jigs. The dovetail slots in the base secure the fence and accept clamps to keep a workpiece from shifting during a cut.

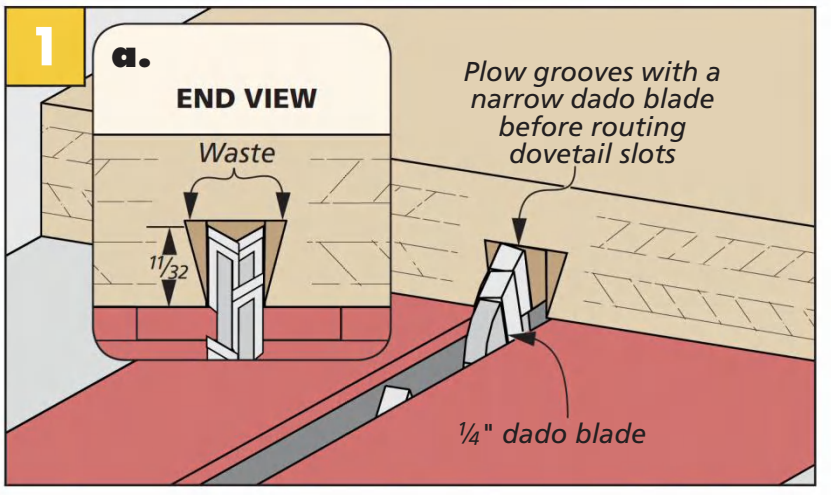

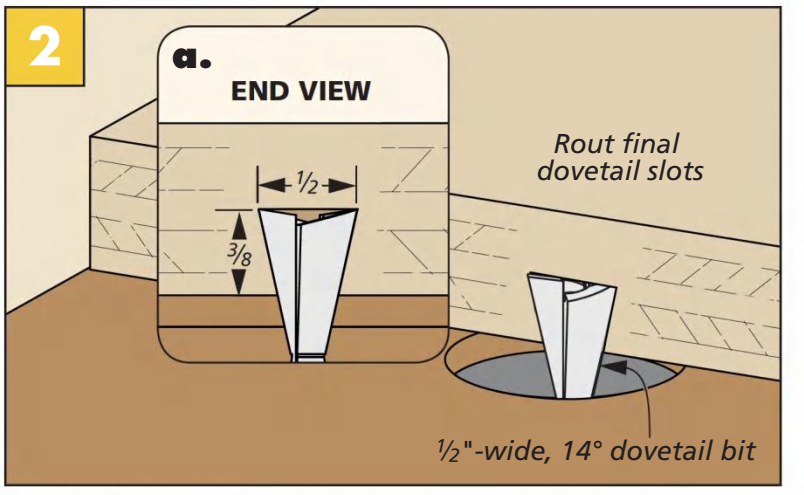

CREATING THE SLOTS

It's pretty clear that making the slots is going to require using a dovetail bit. The bit you need is a pretty standard 14°, ½"-wide cutter. However, with as much material as you need to remove, that puts a lot of mileage on the bit. There's a more efficient way.

The two-step approach is shown in the drawings above. Start at the table saw with a ¼" dado blade installed. Set the blade height to just below the final depth of the groove (⅜").

Plow a groove with the dado blade at each of the locations. This removes most of the waste from the groove and gives you a clear way to line up the cut for the dovetail bit.

ROUTER TABLE. At the router table, use the fence to center the bit on the groove. The bit needs to be raised to the final height. The routing goes pretty quickly. It's a good idea to make a test cut and check the fit with the clamp or dovetail screw, just to be sure.

For a table saw sled, I like to make the platform slightly oversize. This way, when you attach the miter bar, you can trim the platform with an initial cut (drawing above).

But don't stop there. You can put the hardware kit to work on other tools, too. Take a look at the box below. Suddenly making jigs doesn't seem too bad after all. W

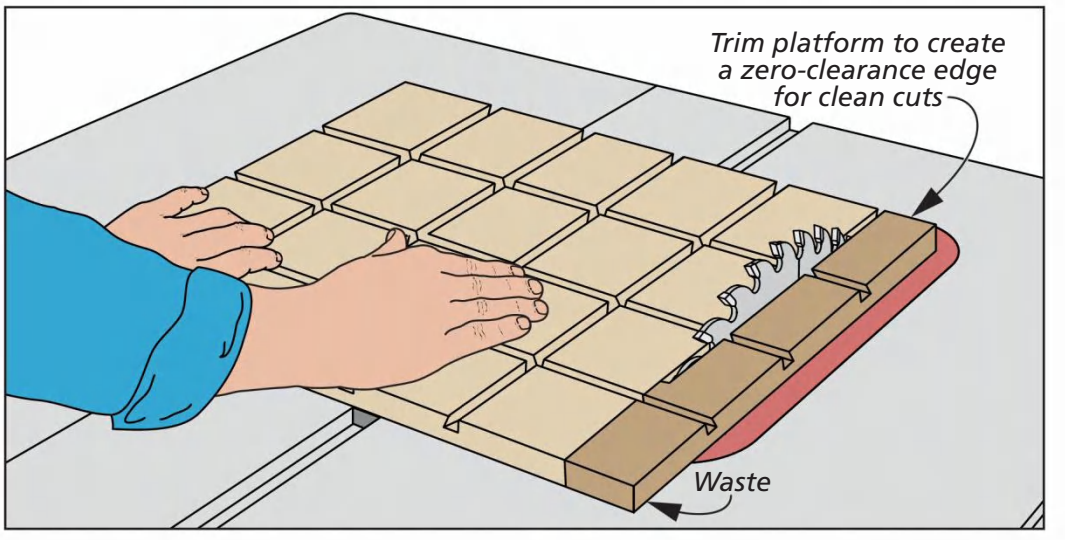

THINK OUTSIDE THE TABLE SAW

On the Router Table. A dado sled comes in handy for making small boxes where the smooth cut of a router bit beats the look of a dado blade cut.

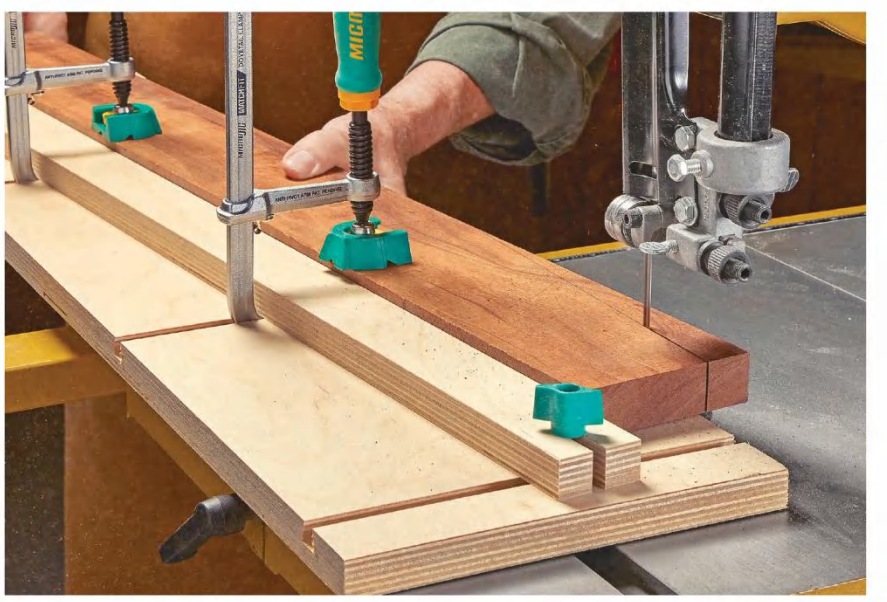

On the Band Saw. For a long jig like this, you can use two two in-line miter bars to guide it. Use it to cut tapers or to put a straight edge on rough-sawn stock.

Glaze Into My Eyes

? I am building the Byrdcliffe-inspired linen press and have finished painting the panels according to your directions and video (a fantastic help). It now calls for a covering the panels with a " brown glaze." I am not sure what that is and where to find it. Please help. Thanks for a fantastic project.

Fred Serota
via Facebook

▲ There are several finishing products you can use as a glaze to adjust the look and color of your projects.

Glazes are used in finishing to add another layer of color to projects without mixing into previous stains or dyes. Often, the coloring is used to increase the contrast of shadow lines and the depth of carved elements.

Another use is to simulate the effects of time and age that a project accumulates. This takes the form of built-up dust and grime in the corners of assemblies.

WHAT TO USE. Several finish companies make dedicated glazes. These look like thick stains and have the consistency of pudding. Glazes are applied over the top of a coat of clear finish to create better depth. Apply it with a brush or rag and wipe off any excess until you have the effect you're aiming for. Then it's a good idea to apply another coat of finish to lock in the glaze.

Gel stain works well as a glaze, too. While it isn't as thick, the process for using it is the same. And it might be something you already have in your shop.

Finally, tinted furniture wax can be used, too. Apply dark colored wax over the final coat of finish and work it around. Allow it to build up in corners and crevices while wiping it clean from flat surfaces. Wax dries hard and fast. Check out the free technique article and video online at Woodsmith.com/252. W

GO 2 Online Extras

For a video on using glaze finishes, go to: Woodsmith.com/252

Sources

Most of the materials and supplies you'll need to build the projects are available at hardware stores or home centers. For specific products or hard-to-find items, take a look at the sources listed here. You'll find each part number listed by the company name. See the left margin for contact information.

MAIL ORDER SOURCES

Project supplies may be ordered from the following companies:

amazon.com

Anest Iwata
515-755-3100
Anestiwata.com

Clockworks
800-381-7458
clockworks.com

General Finishes
800-783-6050
generalfinishes.com

Hardware of the Past
800-447-9974
hardwareofthepast.com

Horton Brasses
800-754-9127
horton-brasses.com

Infinity Cutting Tools
877-872-2487
infinitytools.com

Lee Valley
800-871-8158
leevalley.com

MicroJig
855-747-7233
microjig.com

Nathan's Forge
410-596-1794
NathansForge.com

McMaster-Carr
630-833-0300
mcmaster.com

Rockler
800-279-4441
rockler.com

Van Dyke's Restorers
800-237-8833
vandykes.com

Varathane
Varathanemasters.com

Woodworkers Supply
800-645-9292
woodworker.com

ROUTER TABLE *(p.10)*

- **Infinity Cutting Tools**
  Router Table PRTS-100
  1½"-3" Fence Clamp . . . 100-536
  3"-4½" Fence Clamp . . . 100-537

KITCHEN TOOLS *(p.20)*

- **McMaster-Carr**
  Stainless Steel 8983K113
  Press Fit Rivets 96082A200

SEA CHEST *(p.26)*

- **Nathan's Forge**
  9" Fishtail Hinges . . . . . .
- **Hardware of the Past**
  Half-mortise Lock LS-188

The bulk of the chest was painted with *General Finishes* "China Blue." All other parts were sprayed with lacquer.

PRAIRIE CLOCK *(p.34)*

- **Clockworks**
  Hermle Movement . . 241-080/94
  Weights (4.7lbs) . . . . . Varies
- **Horton Brasses**
  Hinges PB-407
- **Lee Valley**
  Square Knob w/Plate . . 01X4004

The case of the clock was finished with *Varathane* "Traditional Cherry" gel stain and sprayed with a couple of coats of lacquer.

NIGHTSTAND *(p.42)*

- **Rockler**
  ¼" Shelf Supports 33902
- **Van Dyke's Restorers**
  Drawer Pull 02042234
- **Woodworkers Supply**
  Stem Bumper 939-910

The nightstand was finished with *Varathane* "Gunstock" stain. When the stain was dry, the night stand was sprayed with a couple of coats of lacquer.

DEEP REACH CLAMPS *(p.50)*

- **McMaster-Carr**
  Barrel Screws 98002A208
  ⅝"Acme Screw 98935A721
  ⅝" Nut 94815A029
  1¼" Washer 93413A250
  1" Steel Tube 7767T36
  3/16" Steel Rod 9120K31

The clamps are protected with several coats of oil.

SPRAYING FINISHES *(p.56)*

- **Anest Iwata**
  W-400-LV Spray Gun . . .Varies
  AZ3HTE2 Gun . . . . . Varies
  Maintenance Kit . . . . . Varies
- **Rockler**
  Earlex 5500 56736
  Spray Gun Holder 30094

SLED KIT *(p.62)*

- **MicroJig**
  ZeroPlay 360 Sled Kit
  MatchFit Dovetail Clamp AP

RIKON®

EXPANDING The Possibilities

5 YEAR WARRANTY

Expandable Bed Lathe | 40" Between Centers Beefy | 3 HP VSR Motor

Beefy **3HP motor** delivers ample power to turn large diameter projects in forward or reverse modes.

Control Box has a magnetic back so that it can be set anywhere along the lathe for quick access when turning.

1-1/4" x 8 TPI threaded spindle is supported by 4 heavy-duty bearings for precise and dependable turning.

Tailstock's quill extends out to a generous **4-3/4" RAM** travel with precision Acme threading.

Call today for more information **877-884-5167**
or visit **www.rikontools.com** for a dealer near you!

YOU CAN BET
YOUR BUSINESS ON

X-CARVE Pro

MAKE BIGGER PROJECTS FASTER

WITHOUT CHANGING YOUR FOOTPRINT

Built on years of learning from thousands of shops big and small, **it's everything your business needs**—with room to grow.

X-Carve Pro CNC

Rigid aluminum machine in 4'x4' or 4'x2', can carve 4'x8' sheets.

Easel Pro Software

Includes 3-year subscription to our easy-to-use, drag and drop CAD/CAM software.

US Support

Hardware and software support just a phone call or email away.

INVENTABLES®

Find out more and get
SPECIAL PRE-ORDER PRICING
www.XCarvePro.com

Woodsmith

Back Issue Library **Online**

An Incredible **VALUE!**

- Access every issue of Woodsmith ever published — over 228
- Get over 4,000+ projects, tips and technigues.
- Enjoy instant online access on your computer, laptop — even tablet.

LEARN MORE at www.woodsmithlibrary.com

Sign Up for Free Weekly eTips

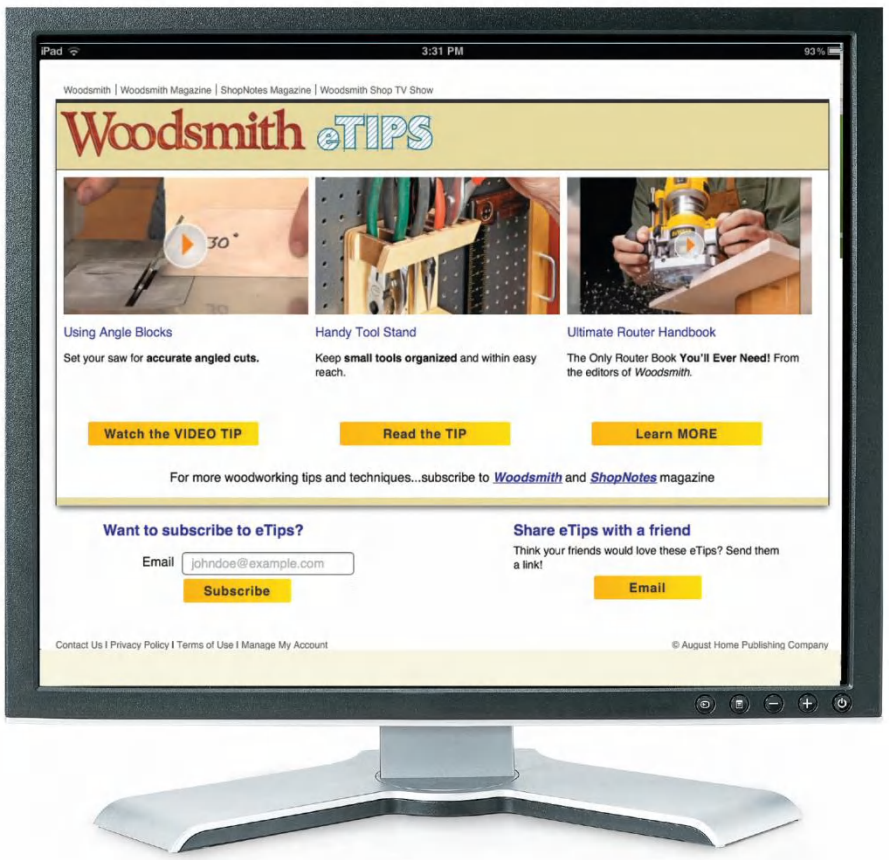

Desktop

- Get a video tip sent to you every week
- Includes a printable, step-by-step tip
- Ready when you are — on any device

Laptop

Tablet

Smartphone

Sign up today at Woodsmith.com